Site Design Standards

CITY OF COLLEGE STATION

Planning & Development Services

February 2019

Table of Contents

Introduction **4**
- Applicability 4
- Purpose & Intent 4
- Waivers 4

Pavement and Surfacing Standards **5**
- Pavement & Surfacing 5
- Curbs 6
- Driveway Requirements 7

Fire Service Standards **9**
- Fire Hydrants 9
- Fire Department Connection 10
- Fire Flow Requirements 10
- Fire Apparatus Access Roads (Fire Lanes) 11
- Aerial Fire Apparatus Access Roads 12
- Fire Lane Markings 12
- Fire Apparatus Access Road Gates 13

Solid Waste Standards **14**
- Dimensions of the Containers 14
- Pavement Standards 14
- Required Screening 14
- Minimum Dimensions for Enclosures 15
- Access 17
- Dimensions for Maneuvering 18

Sign Standards **19**
- Sign Visibility 19
- Determining Sign Area 19

Non-Residential Architectural Standards **20**
- Submittal Requirement 20
- Architectural Metal & Metal Panels 20
- Bicycle Parking 21
- Tree Wells 23

Landscape & Streetscape Standards **24**
- Submittal Requirement 24
- Tree Preservation 24
- Planting List 26

Northgate Specific Standards **31**
- Bicycle Racks 31
- Brick Pavers and Approved Patterns 33
- Required Street Tree Options 33
- Street Tree Soil 34
- Tree Planters 36
- Tree Grates 37
- Tree Wells 37
- Sidewalk Benches 38
- Trash Receptacles 38

Table of Contents

Northgate Outdoor Dining Standards **39**
Physical Barrier 39

Miscellaneous Site Development Standards **40**
Gating of Multi-Family Developments 40

General Site Plan Notes **41**

Site Plan Submittal Standards **42**

Introduction

Site Design Minimum Standards for Commercial and Multi-Family Projects

Applicability

The following site design standards shall be used in the development and redevelopment of all commercial and multi-family sites in the City of College Station.

No development approval shall be granted, nor building permit issued, for a development that does not meet the minimum requirements of these Design Standards, except as provided herein.

Purpose and Intent

The purpose of the City of College Station Site Design Standards is to establish and provide the minimum standards to be adhered to in the design and construction of all commercial and multi-family private improvements. It is the intent to obtain high quality construction throughout, with the completed work complying with the Site Design Standards.

If required by the Administrator, the Contractor shall furnish satisfactory evidence (including reports or tests) as to the kind and quality of materials to be used.

Waiver to the Standards

A waiver to the standards may be approved by the Administrator if it is demonstrated that the materials and design are equal or superior to the requirements stated herein.

Pavement and Surfacing Standards

Pavement and Surfacing
Except as otherwise provided, all off-street parking areas, including drive aisles, driveways and parking stalls, shall be constructed with a minimum allowable parking lot pavement of one of the following options:

- **Asphalt** - a minimum of one and one-half inches (1.5") of asphalt pavement on top of six inches (6") of limestone base.

- **Concrete** - a minimum of five inches (5") thick; reinforcement within the concrete section shall consist of number four (#4) bars on eighteen inch (18") centers, centered within the pavement thickness.

All off-street parking areas shall be installed graded to drain and shall be maintained so as to dispose of surface water accumulated within the area. Parking spaces shall be arranged and marked so as to provide for the safe and orderly parking of vehicles.

Non-Public, All-Weather drive surfaces, whether temporary or permanent, that are required for emergency access or turnaround for emergency vehicles must be constructed to function under all weather conditions. To accommodate a project during construction, phasing, or permanent installation, drive surfaces that do not meet the requirements for permanent pavement surfaces may be allowed at the discretion of the Administrator for the specific conditions stated below:

- **Temporary All-Weather Surface (During Construction):** A structure under construction must be accessible by an all-weather drive surface. This surface may consist of the permanent pavement as described above, or may consist of four inches (4") of limestone base with a one-course seal coat as specified in the Texas Department of Transportation Standard Specifications for Construction of Highways, Streets and Bridges, 1993 Edition, Item 316. This temporary all-weather surface must be reworked or replaced to meet the permanent pavement standard as described above prior to issuance of a Certificate of Occupancy.

- **Semi-Permanent All-Weather Surface (During Phasing):** In cases during phasing of a large project, emergency access and turnarounds often must be added as a temporary measure until additional phases are constructed. These emergency access areas may consist of permanent pavement surface as described above, or may consist of six inches (6") of limestone base with one-course seal coat as specified in the Texas Department of Transportation Standard Specifications for Construction of Highways, Streets and Bridges, 1993 Edition, Item 316. If the semi-permanent surface is used, the six-inch (6") curb is not required, and these areas must be gated or protected from public usage and signed for emergency access only. When the additional phase is constructed these areas must be removed or reworked to meet the permanent pavement standards as described above.

- **Permanent All-Weather Surface (Permanent):** In some development scenarios, an emergency access or turnaround must be constructed to meet emergency access purposes and is not required for public traffic, service vehicles or sanitation vehicles. In these cases, the area required for emergency access only may consist of permanent pavement surface as specified above, or may consist of six inches (6") of limestone base with a two-course seal coat as specified in the Texas Department of Transportation Standard Specifications for Construction of Highways, Streets and Bridges, 1993 Edition, Item 316. If the seal coat surface is used, a six-inch (6") curb is not required, and these areas must be gated or protected from public usage and signed for emergency access only.

Curbs

A six inch (6") raised monolithic concrete curb shall be required around the entire perimeter of all paved areas, including all parking islands. Design of the combined curb and gutter section must meet minimum standards as shown in the diagram below:

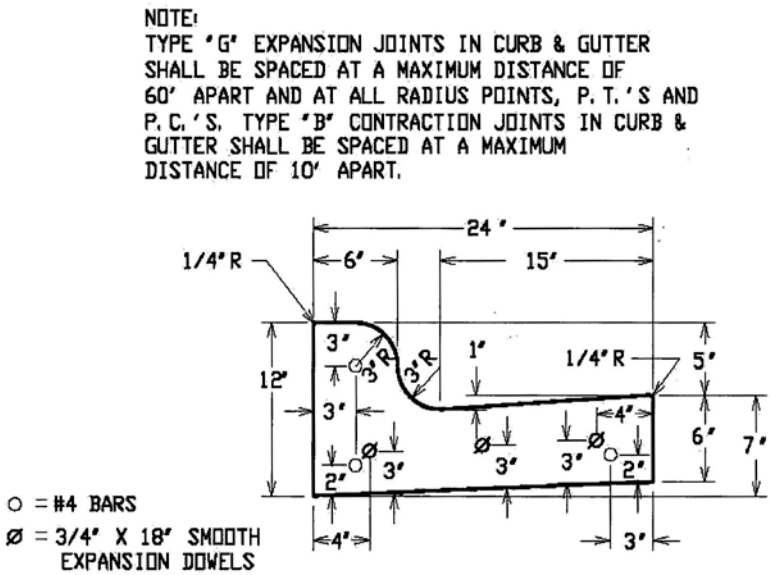

Temporary Curbing

A temporary six inch (6") raised concrete curb may be permitted in lieu of the minimum standard stated above, at the discretion of the Administrator, when a project is phased in such a way that a permanent, monolithic curb may preclude development of future phases or limit access to a recorded private or public access easement adjoining properties. Wheel stops shall not be permitted as temporary curbing. Temporary curbing must have the appearance of permanent curbing and shall be temporarily attached to the pavement surfacing below and meet the minimum standards for dowelled in curbs as shown in the diagrams below:

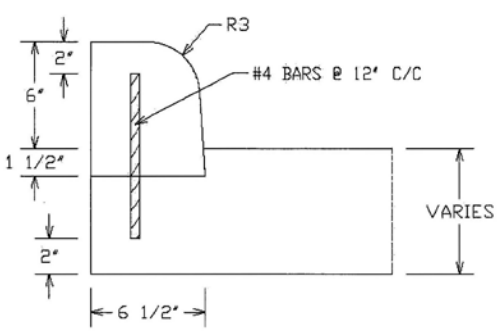

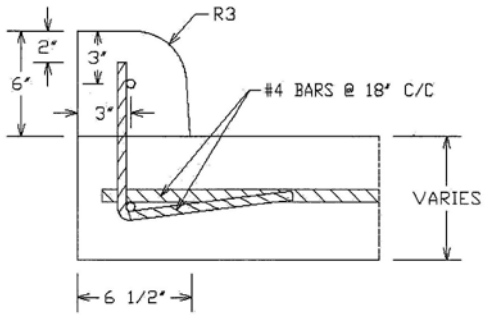

Driveway Requirements

Commercial Driveways shall be constructed to the standard shown in the detail below:

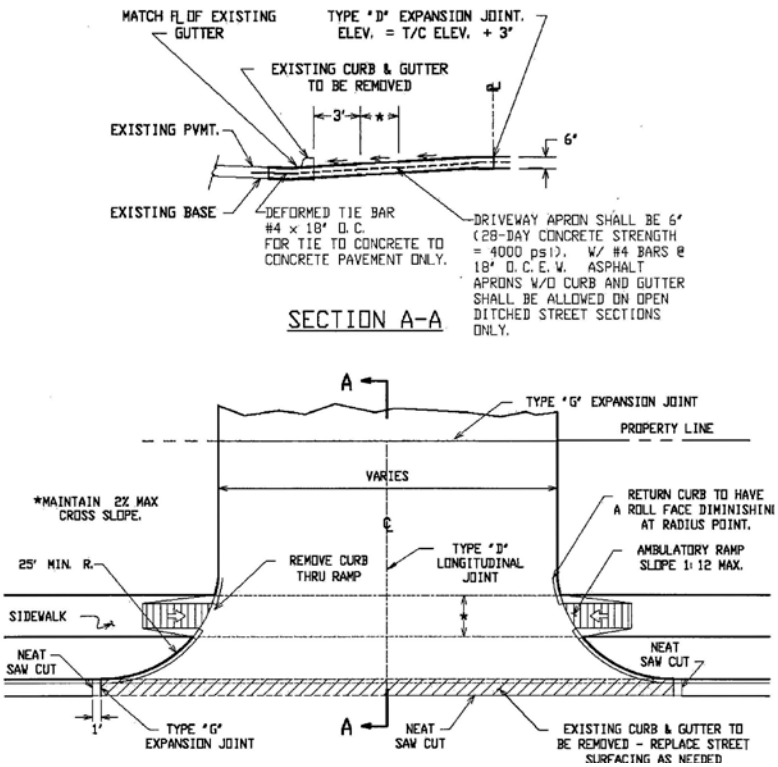

Detail of a typical Concrete Driveway Apron:

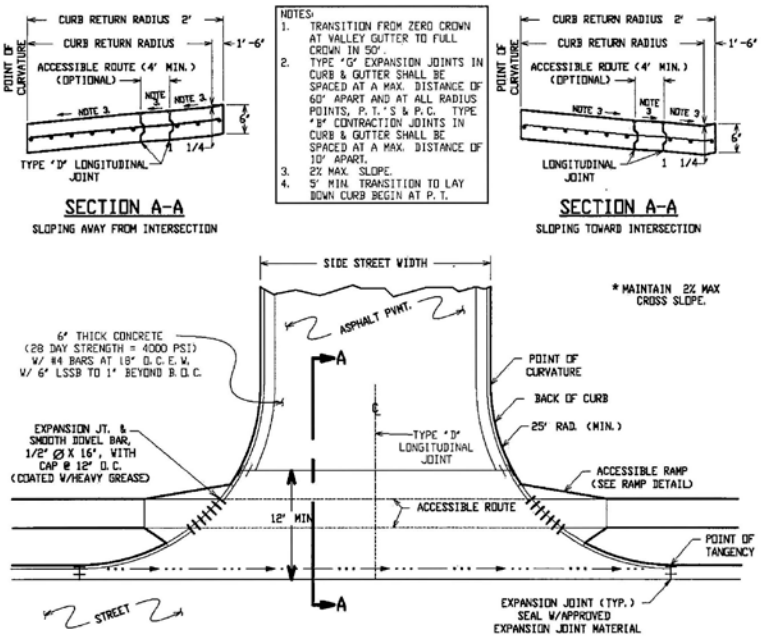

Detail of driveway with culvert:

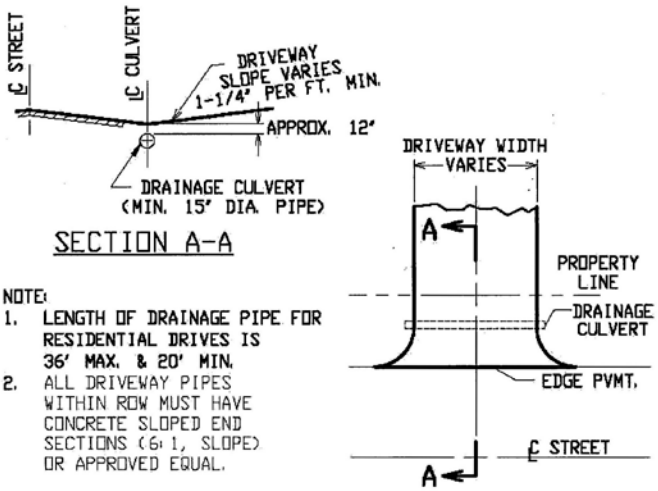

All fire service features, including, but not limited to, apparatus access roadways, fire flows, and fire hydrant locations and distribution must meet the International Fire Code, as adopted and amended.

Fire Hydrants

Fire hydrants must be placed along an approved fire lane. Hydrants shall be located so that no part of any structure, above ground tanks or fueling stations shall be more than three hundred feet (300') from a fire hydrant as measured along an approved fire lane as the fire hose is laid off the fire truck. In no case shall this distance be measured across grass, wooded or landscaped areas, over curbs, through fences, through ditches or across paved areas which are not designed and maintained as fire lanes.

No part of any commercial structure shall be located outside the limits of a one hundred fifty foot (150') arc from a point where fire apparatus can operate.

Fire hydrants must be located on the same side of a public street as the structures it is intended to serve, and must be accessible at all times. Parking stalls are not permitted to be located between the fire hydrant and the fire apparatus access road. A three foot (3') clear space is required on all sides of the fire hydrant.

The number and spacing of fire hydrants shall not be less than shown in the following chart.

NUMBER AND DISTRIBUTION OF FIRE HYDRANTS

FIRE-FLOW REQUIREMENT (gpm)	MINIMUM NUMBER OF HYDRANTS	AVERAGE SPACING BETWEEN HYDRANTS[a, b, c] (feet)	MAXIMUM DISTANCE FROM ANY POINT ON STREET OR ROAD FRONTAGE TO A HYDRANT[d]
1,750 or less	1	500	250
2,000-2,250	2	450	225
2,500	3	450	225
3,000	3	400	225
3,500-4,000	4	350	210
4,500-5,000	5	300	180
5,500	6	300	180
6,000	6	250	150
6,500-7,000	7	250	150
7,500 or more	8 or more[e]	200	120

For SI: 1 foot = 304.8 mm, 1 gallon per minute = 3.785 L/m.

a. Reduce by 100 feet for dead-end streets or roads.

b. Where streets are provided with median dividers which can be crossed by fire fighters pulling hose lines, or where arterial streets are provided with four or more traffic lanes and have a traffic count of more than 30,000 vehicles per day, hydrant spacing shall average 500 feet on each side of the street and be arranged on an alternating basis up to a fire-flow requirement of 7,000 gallons per minute and 400 feet for higher fire-flow requirements.

c. Where new water mains are extended along streets where hydrants are not needed for protection of structures or similar fire problems, fire hydrants shall be provided at spacing not to exceed 1,000 feet to provide for transportation hazards.

d. Reduce by 50 feet for dead-end streets or roads.

e. One hydrant for each 1,000 gallons per minute or fraction thereof.

Fire Department Connection (FDC)

All buildings, or portions of buildings, 12,000 square feet in area or larger, per the International Building Code, as amended, and/or all structures exceeding two stories in height, regardless of area, are required to utilize an automatic sprinkler system throughout the building. Portions of buildings that are separated by fire walls without openings, constructed in accordance with the International Building Code, may not require an automatic sprinkler system if smaller than 12,000 square feet in area. Some assembly uses intended for food and/or drink consumption including, but not limited to banquet halls, night clubs, restaurants, taverns, and bars that exceed 5,000 square feet in area shall require an automatic sprinkler system. A Fire Department Connection (FDC) is required for all buildings utilizing an automatic sprinkler system. The FDC must be located within 100 feet of a fire hydrant.

Fire Flow Requirements

In general, the calculation area for fire flow requirements is based on the total gross area of the structure, including any area under the horizontal projections of the roof of the structure. Portions of the building that are separated by fire walls without openings and constructed in accordance with the International Building Code, may be considered as separate areas for the purposes of fire flow calculations. For type IA and type IB construction, the calculation shall be based on the area of the three largest successive floors.

MINIMUM REQUIRED FIRE FLOW AND FLOW DURATION FOR BUILDINGS[a]

FIRE-FLOW CALCULATION AREA (square feet)					FIRE FLOW (gallons per minute)[c]	FLOW DURATION (hours)
Type IA and IB[b]	Type IIA and IIIA[b]	Type IV and V-A[b]	Type IIB and IIIB[b]	Type V-B[b]		
0-22,700	0-12,700	0-8,200	0-5,900	0-3,600	1,500	2
22,701-30,200	12,701-17,000	8,201-10,900	5,901-7,900	3,601-4,800	1,750	
30,201-38,700	17,001-21,800	10,901-12,900	7,901-9,800	4,801-6,200	2,000	
38,701-48,300	21,801-24,200	12,901-17,400	9,801-12,600	6,201-7,700	2,250	
48,301-59,000	24,201-33,200	17,401-21,300	12,601-15,400	7,701-9,400	2,500	
59,001-70,900	33,201-39,700	21,301-25,500	15,401-18,400	9,401-11,300	2,750	
70,901-83,700	39,701-47,100	25,501-30,100	18,401-21,800	11,301-13,400	3,000	3
83,701-97,700	47,101-54,900	30,101-35,200	21,801-25,900	13,401-15,600	3,250	
97,701-112,700	54,901-63,400	35,201-40,600	25,901-29,300	15,601-18,000	3,500	
112,701-128,700	63,401-72,400	40,601-46,400	29,301-33,500	18,001-20,600	3,750	
128,701-145,900	72,401-82,100	46,401-52,500	33,501-37,900	20,601-23,300	4,000	4
145,901-164,200	82,101-92,400	52,501-59,100	37,901-42,700	23,301-26,300	4,250	
164,201-183,400	92,401-103,100	59,101-66,000	42,701-47,700	26,301-29,300	4,500	
183,401-203,700	103,101-114,600	66,001-73,300	47,701-53,000	29,301-32,600	4,750	
203,701-225,200	114,601-126,700	73,301-81,100	53,001-58,600	32,601-36,000	5,000	
225,201-247,700	126,701-139,400	81,101-89,200	58,601-65,400	36,001-39,600	5,250	
247,701-271,200	139,401-152,600	89,201-97,700	65,401-70,600	39,601-43,400	5,500	
271,201-295,900	152,601-166,500	97,701-106,500	70,601-77,000	43,401-47,400	5,750	
295,901-Greater	166,501-Greater	106,501-115,800	77,001-83,700	47,401-51,500	6,000	
—	—	115,801-125,500	83,701-90,600	51,501-55,700	6,250	
—	—	125,501-135,500	90,601-97,900	55,701-60,200	6,500	
—	—	135,501-145,800	97,901-106,800	60,201-64,800	6,750	
—	—	145,801-156,700	106,801-113,200	64,801-69,600	7,000	
—	—	156,701-167,900	113,201-121,300	69,601-74,600	7,250	
—	—	167,901-179,400	121,301-129,600	74,601-79,800	7,500	
—	—	179,401-191,400	129,601-138,300	79,801-85,100	7,750	
—	—	191,401-Greater	138,301-Greater	85,101-Greater	8,000	

For SI: 1 square foot = 0.0929 m^2, 1 gallon per minute = 3.785 L/m, 1 pound per square inch = 6.895 kPa.

a. The minimum required fire flow shall be permitted to be reduced by 25 percent for Group R.

b. Types of construction are based on the *International Building Code*.

c. Measured at 20 psi.

Fire Apparatus Access Roads (Fire Lanes)
All fire lanes shall be constructed using the following minimum standards or equivalent, as approved by the Administrator:

- **Asphalt** - a minimum of one and one-half inches (1.5") of asphalt pavement on top of six inches (6") of limestone base.

- **Concrete** - a minimum of six inches (6") thick, the reinforcement within the concrete section shall consist of number four (#4) bars on eighteen inch (18") centers, centered within the pavement thickness.

Fire lanes shall be a minimum of 20 feet (20') in width and have a minimum unobstructed height of fourteen feet (14'). Fire lanes in excess of 100 feet shall provide a turn around as provided for in the following table and graphics.

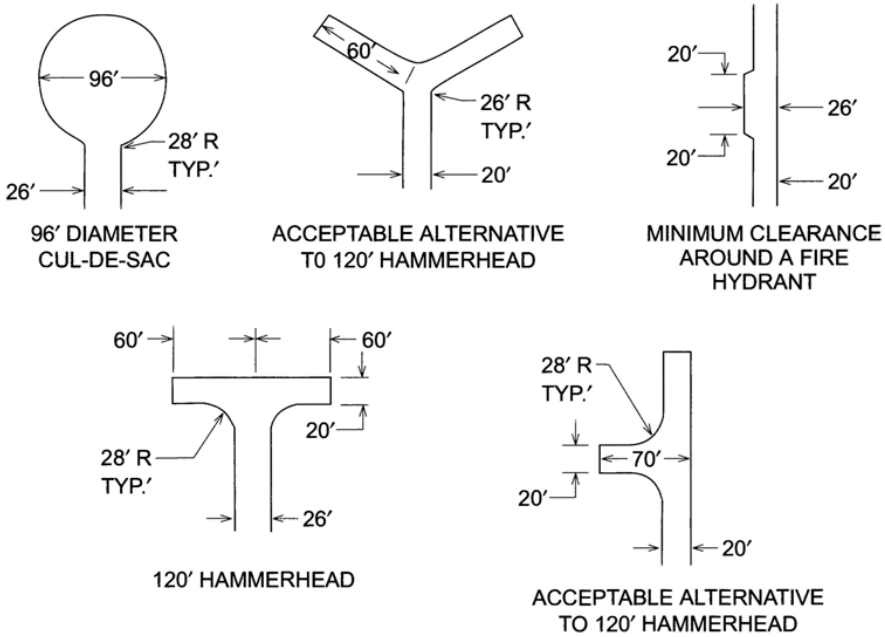

All fire lanes shall meet the following turning radii for an aerial truck:

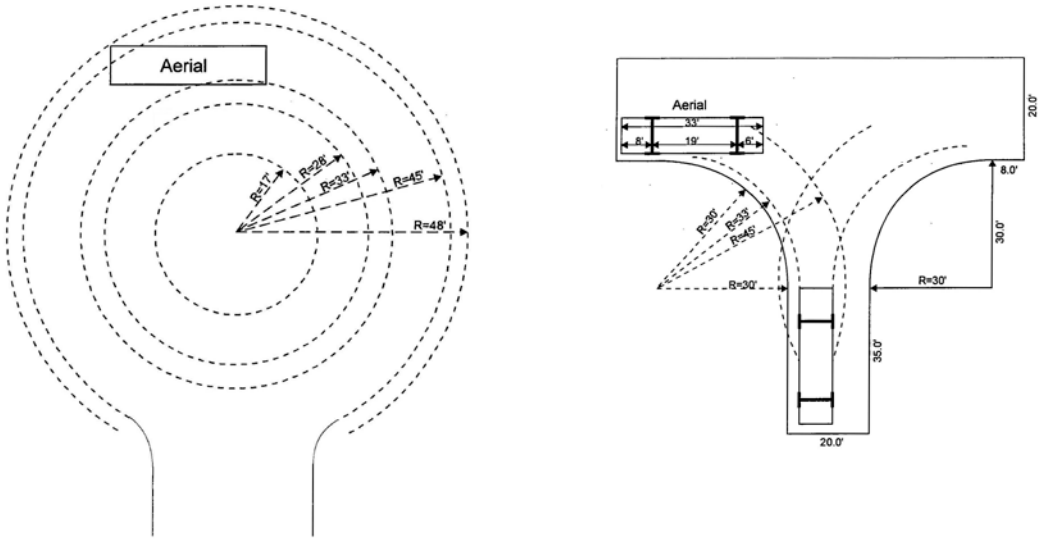

Aerial Fire Apparatus Access Roads
For all structures or portions of structures, including parapets and other obstructions to the roof of the building, exceeding 30 feet in height, an aerial fire apparatus access road shall be required parallel to one entire side of the building to provide access to the roof of the structure. Aerial fire apparatus access roads shall be a minimum of 26 feet in width and be located within a minimum of 15 feet and a maximum of 30 feet from the building. Overhead utilities shall not be located within an aerial fire apparatus access road.

Fire Lane Markings
All curbs and curb ends shall be painted red with four inch (4") white lettering stating "FIRE LANE - NO PARKING - TOW AWAY ZONE". Wording may not be spaced more than fifteen feet (15') apart.

In areas where fire lanes are required, but no continuous curb is available, one of the following methods shall be used in conjunction with the curb markings to indicate that the fire lane is continuous:

Option 1: A sign twelve inches (12") wide and eighteen inches (18") in height shall be mounted in a conspicuous location at each entrance to the property. Such signs shall be twelve inches (12") wide and eighteen inches (18") high, with a companion sign twelve inches (12") wide and six inches (6") high stating "Tow-Away Zone". Such signs shall be painted on a white background with symbols, letters and border in red.

Option 2: From the point the fire lane begins to the point the fire lane ends, including behind all parking spaces which adjoin a fire lane, shall be marked with one continuous eight inch (8") red stripe painted on the drive surface behind the parking spaces. All curbing adjoining a fire lane must be painted red. Red stripes and curbs will contain the wording "FIRE LANE - NO PARKING - TOW AWAY ZONE", painted in four inch (4") white letters.

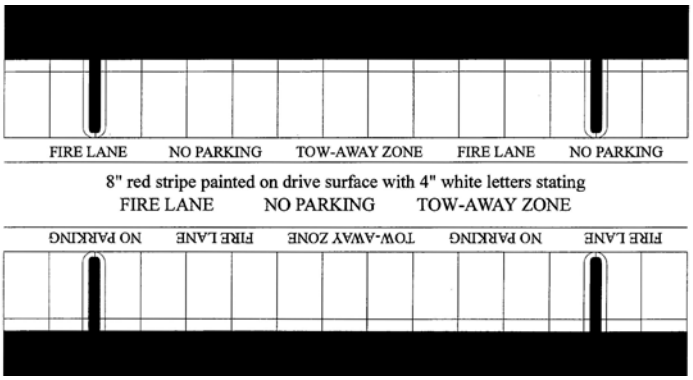

In those cases where curb markings are not possible or where signs would, in the Fire Marshal's opinion, work more effectively, the Fire Marshal may require signs in lieu of curb markings.

Fire Apparatus Access Road Gates
Gates obstructing a fire lane must have a minimum width of 20 feet and utilize either swinging or sliding gates. All security gates must have a Knox key box and manual operation must be able to be by one person. Gates may not be locked with a pad lock or chain.

Access to Multi-Family Developments
Multi-family developments with 100 dwelling units or greater require a second point of ingress / egress from the development to the public right-of-way. In the case that the units have an approved fire suppression system, the number of dwelling units requiring a second point of ingress / egress is 200.

Solid Waste Standards

Requirements pertaining to the type and number of solid waste containers or frequency of collection are based on the type of commercial activity at the location, and the size of the development itself.

Dimensions of the Containers

- A 300-gallon side-loading automated container is 52 inches in diameter and 48 inches tall.
- A 4-yard front-end-loading dumpster is 4 feet wide by 6 feet long and 5 feet tall
- An 8-yard front-end-loading dumpster is 6 feet wide by 6 feet long and 6 feet 6 inches tall.
- A 30-yard roll-off compactor is 8 feet wide by 24 feet long.

Pavement Standards

All sanitation service routes on site shall be constructed with the following minimum standards:

- **Asphalt** - a minimum of one and one-half inches (1.5") of asphalt pavement on top of six inches (6") of limestone base.

- **Concrete** - a minimum of six inches (6") thick, the reinforcement within the concrete section shall consist of number four (#4) bars on eighteen inch (18") centers, centered within the pavement thickness.

All required container and dumpster pads shall be constructed of concrete six inches (6") thick. The reinforcement within the concrete section shall consist of number four (#4) bars on 18 inch centers, centered within the pavement thickness.

Required Screening

All containers are required to be screened from the right-of-way and all adjacent properties by a six foot high opaque screen. A gate is required when opening is in view of the public right-of-way, except for 300-gallon side-loading automated containers. Gates shall have a minimal width of 12 feet when open, shall swing 180 degrees from the closed position, and shall utilize a positive-locking mechanism while in the open position.

The 300-gallon side-loading automated container enclosure shall be open on the side facing the collection point. The open side cannot be facing the public right-of-way.

Enclosures shall not be placed in drainage flow areas.

It is the City's preference that screening structures be located outside of any public easement. If maintenance of City utilities requires the removal of a screening structure, it must be replaced at the property owner's expense.

Minimum Dimensions for Enclosures:
Bollards and other such obstructions shall not be set within the minimum dimensions for enclosures.

Interior clearance (inside the screen) dimensions for a:

- Single 300-gallon container (side-loading) enclosure shall be ten feet deep x ten feet wide (10' x 10').

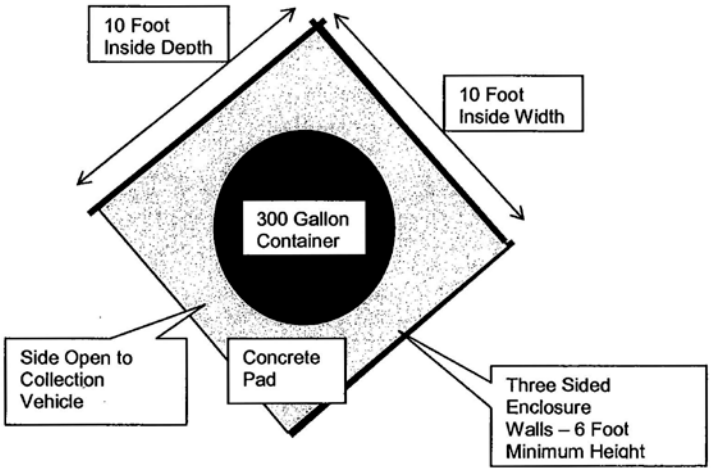

- Single (one four-yard or one eight-yard) dumpster enclosure shall be 12 feet deep x 12 feet wide. The minimum width of the gate or doors shall be no less than 12 feet.

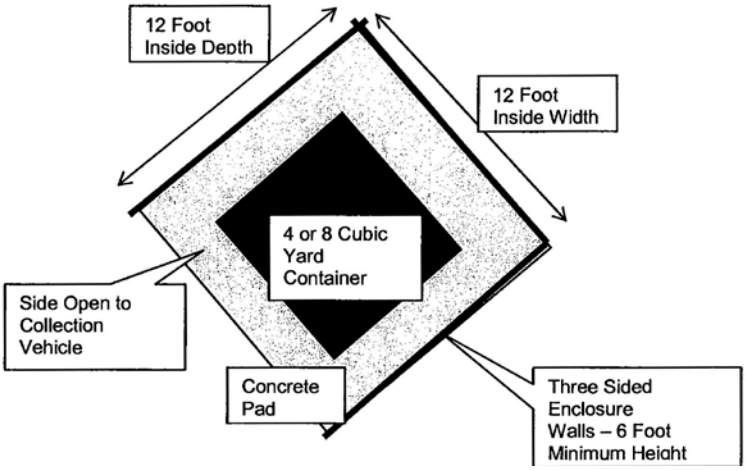

- Double (two four-yard or two eight-yard) dumpster enclosure shall be 12 feet deep x 24 feet wide. The minimum width of the gate or doors shall be no less than 24 feet.

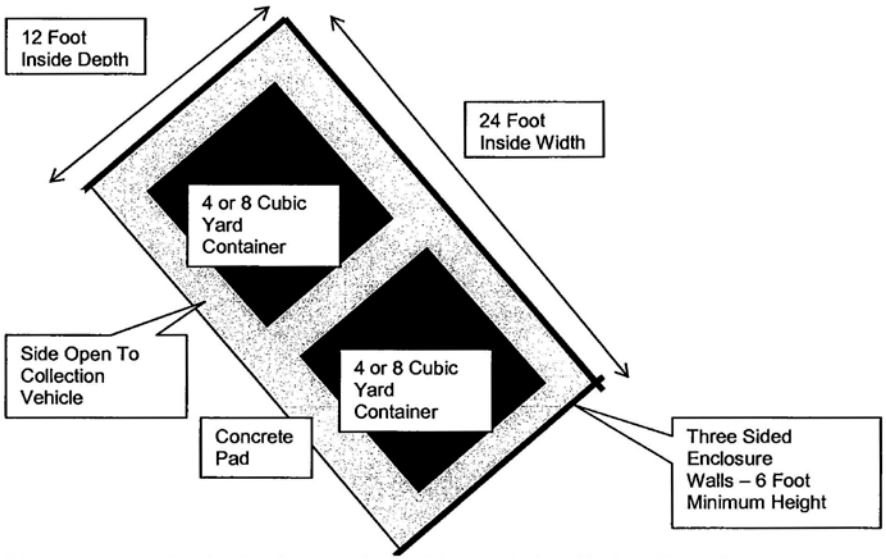

- Triple (three eight-yard) dumpster enclosure shall be 12 feet deep x 36 feet wide. The minimal width of the gate or doors shall be no less than 36 feet.

- A 30-yard roll-off compactor enclosure shall be 29 feet deep x 16 feet wide. The minimal width of the gate or doors shall be no less than 12 feet.

Access

Access areas shall be a minimum of 20 feet in width and have a minimum unobstructed height of 14 feet. Outside turning radii in these areas shall be a minimum of 45 feet.

At no time shall the collection vehicle be required to back more than 100 feet while on the property, or be required to back out into or from a public right-of-way. In such cases, a tee or circle turnaround that meets the minimum fire lane standards, as shown below, will be required.

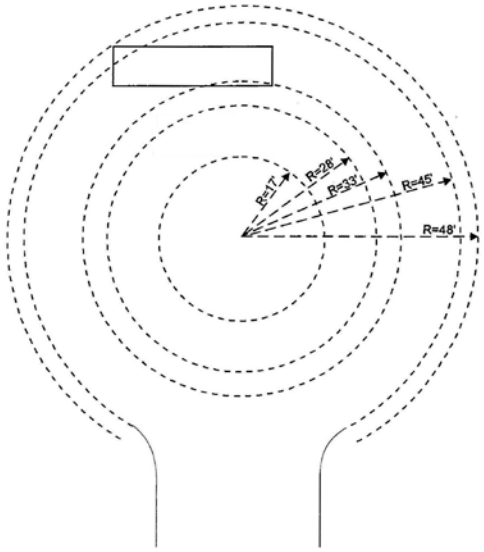

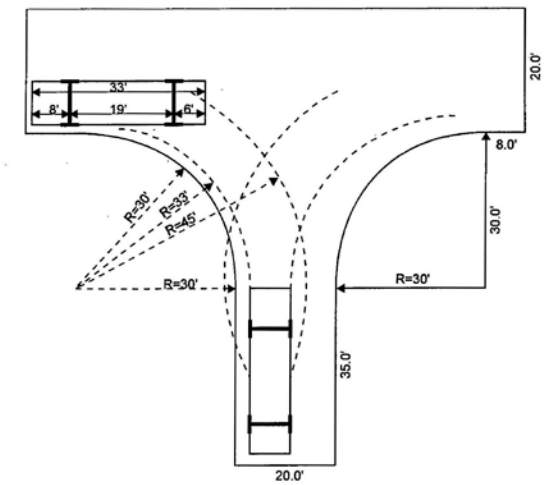

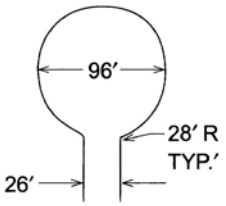

96′ DIAMETER CUL-DE-SAC

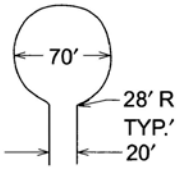

70′ DIAMETER CUL-DE-SAC

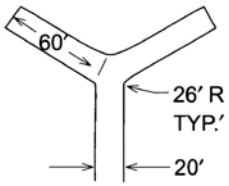

ACCEPTABLE ALTERNATIVE T0 120′ HAMMERHEAD

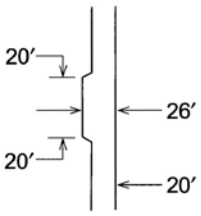

MINIMUM CLEARANCE AROUND A FIRE HYDRANT

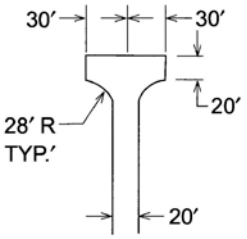

60′ HAMMERHEAD

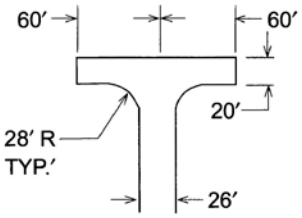

120′ HAMMERHEAD

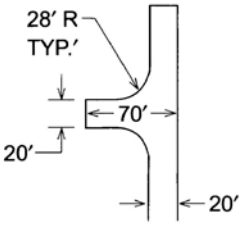

ACCEPTABLE ALTERNATIVE TO 120′ HAMMERHEAD

In all cases, approach design should facilitate a looping or circle ingress / egress path that avoids the necessity of the collection vehicle having to conduct backing maneuvers as much as possible.

Dimensions for Maneuvering

Depending on the angle of the enclosure from the access path, a clear maneuvering area of up to 65 feet in front of the container, as shown below, will be required. No parking will be allowed in the maneuvering area.

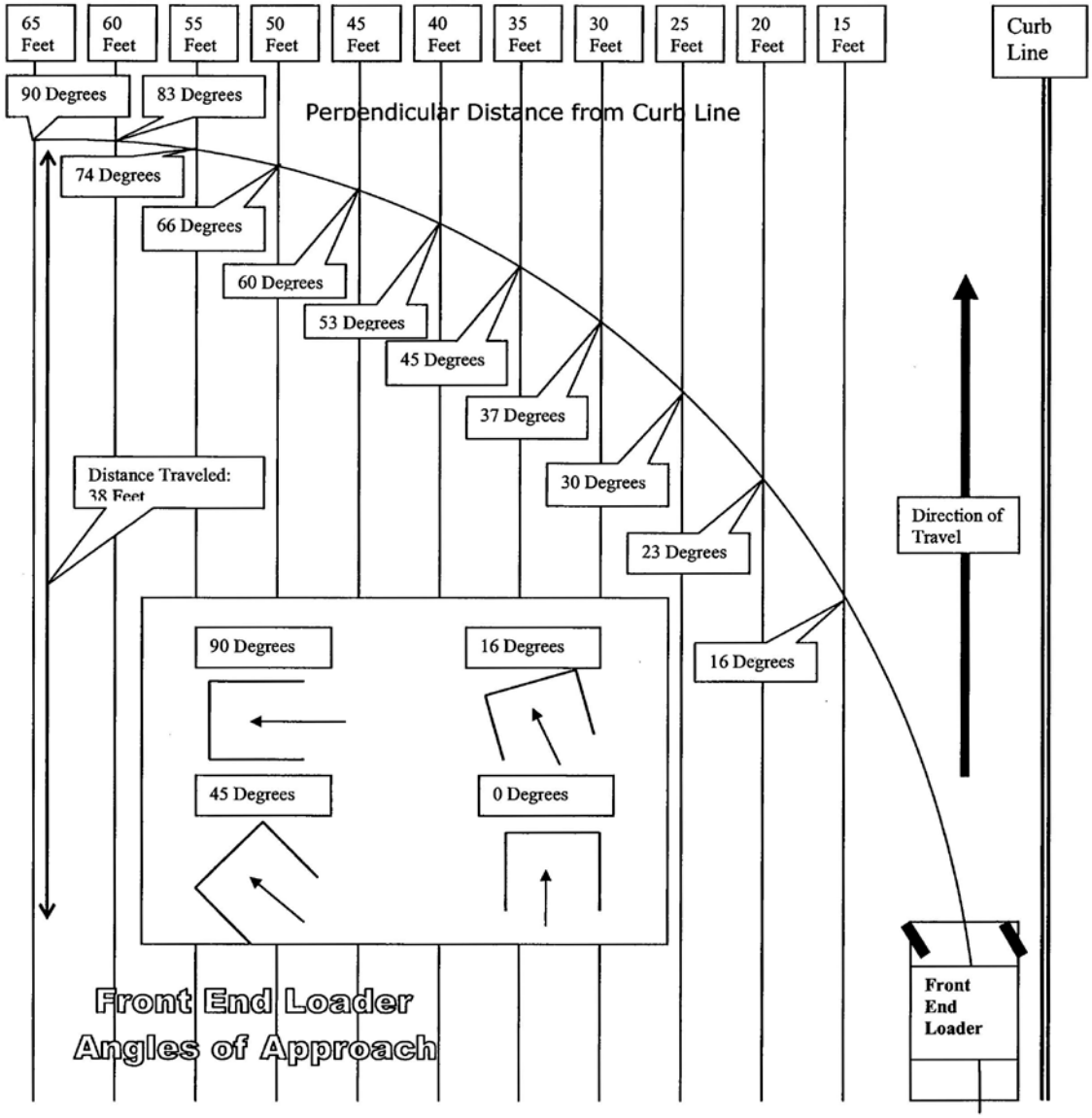

Sign Standards

Sign Visibility

Section 7.5 Signs gives the Administrator the authority to determine what is "not easily identified" or visible, as measured from any applicable property line or rights-of-way. The following chart shall be used when making this interpretation.

Distance from Property Line	Height of Copy or Logo
100’	2” or less
150'	3” or less
200’	5” or less
350’	7” or less
400’	8” or less
450'	9” or less
525'	11” or less
600'	12” or less

Determining Sign Area

The area of a sign is the area enclosed by the minimum imaginary rectangle or vertical and horizontal lines that fully contains all extremities, exclusive of supports.

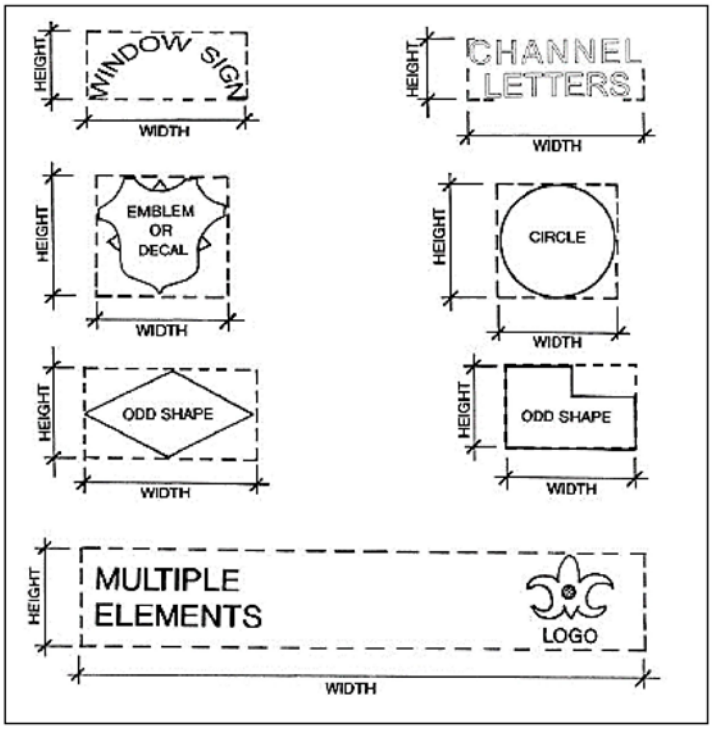

Submittal Requirement

All architectural submittals shall provide elevation drawings for each façade and a material legend (see sample legend below) for each facade.

City of College Station SAMPLE LEGEND USE OF MATERIALS ON FAÇADE 'A'		
Total Square Footage of Façade 'A': 10,000 s.f.		
Material	**Area in Square Feet**	**Percent of Overall Facade**
Stucco	2,000 s.f.	20%
Brick	5,000 s.f.	50%
Doors and Windows	3,000 s.f.	30%

Architectural Metal & Metal Panels

R- Panel, PBR Panel, and traditional rolling wave corrugated metal are prohibited building materials. Metal will be considered corrugated if fasteners are exposed or panel widths are greater than 24 inches. Striated metal panels with 1/8 inch striations or less, and standing seams with a minimum height of 1 ½ inches will not be considered corrugated.

R-Panel

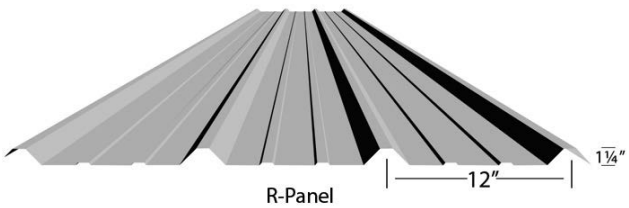

PBR Panel

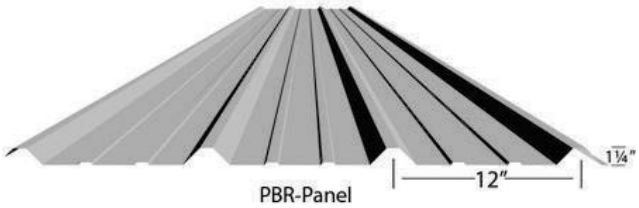

Rolling Wave

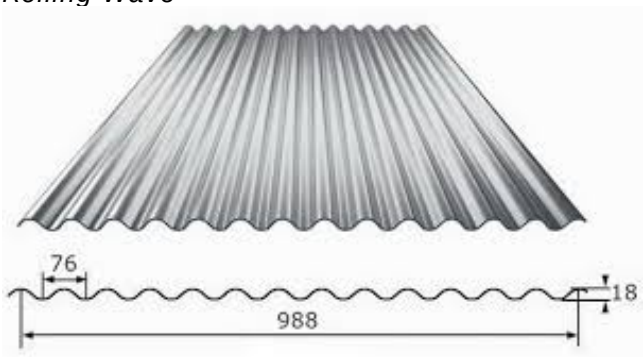

Bicycle Parking
Each development shall provide bicycle facilities capable of storing a minimum of two (2) bicycles. The area provided for such a facility shall be approximately four feet wide by six feet long (4' X 6'), or as approved by the Administrator.

The number of bicycle parking spaces shall be based on the required automobile parking spaces, in accordance with Figure 1 in UDO Section 7.2.J.1.b.

Approved bicycle facilities shall utilize the Bicycle Parking Space Layout below:

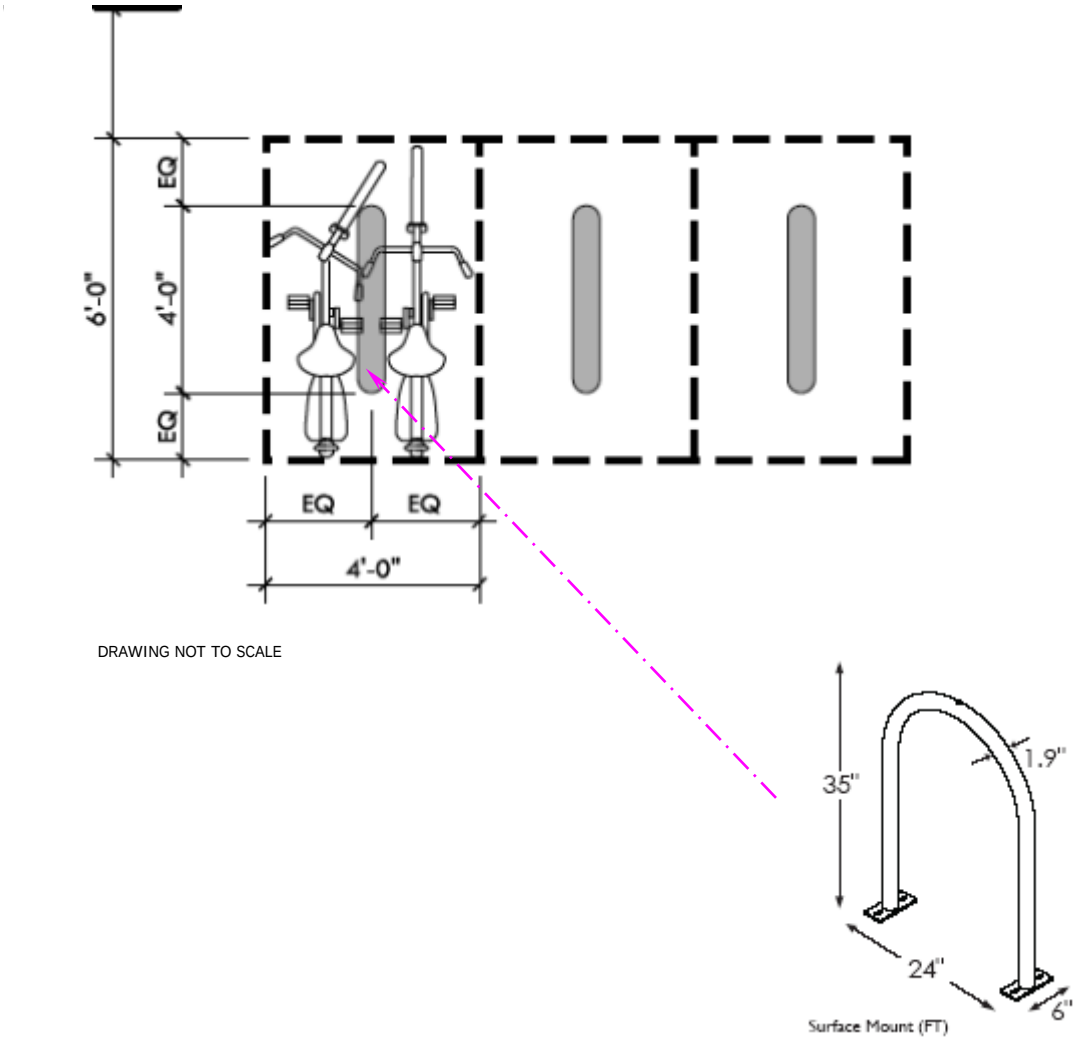

Acceptable Bicycle Racks

The rack should provide two points of contact with the frame—at least 6" apart horizontally. Or, if a rack cradles a bicycle's wheel, it must also support the frame securely at one point or more. The rack's high point should be at least 32".

INVERTED U
also called
staple, loop

POST & RING

Discouraged Bicycle Racks

WAVE
also called undulating
or serpentine

SPIRAL

BOLLARD

Prohibited Bicycle Racks

SCHOOLYARD
also called
comb, grid

Tree Wells (At Grade or Raised):
For at-grade tree wells, a minimum 72 inch square tree grate with a 16 inch diameter expandable tree opening is required.

Raised planters should be a minimum of six feet by six feet (6' x 6') and 18 inches high. The maximum height is 30 inches. The bottom of the bed must be kept open and planting soil should be cultivated into the original soil to encourage roots to escape from the bed into surrounding soil.

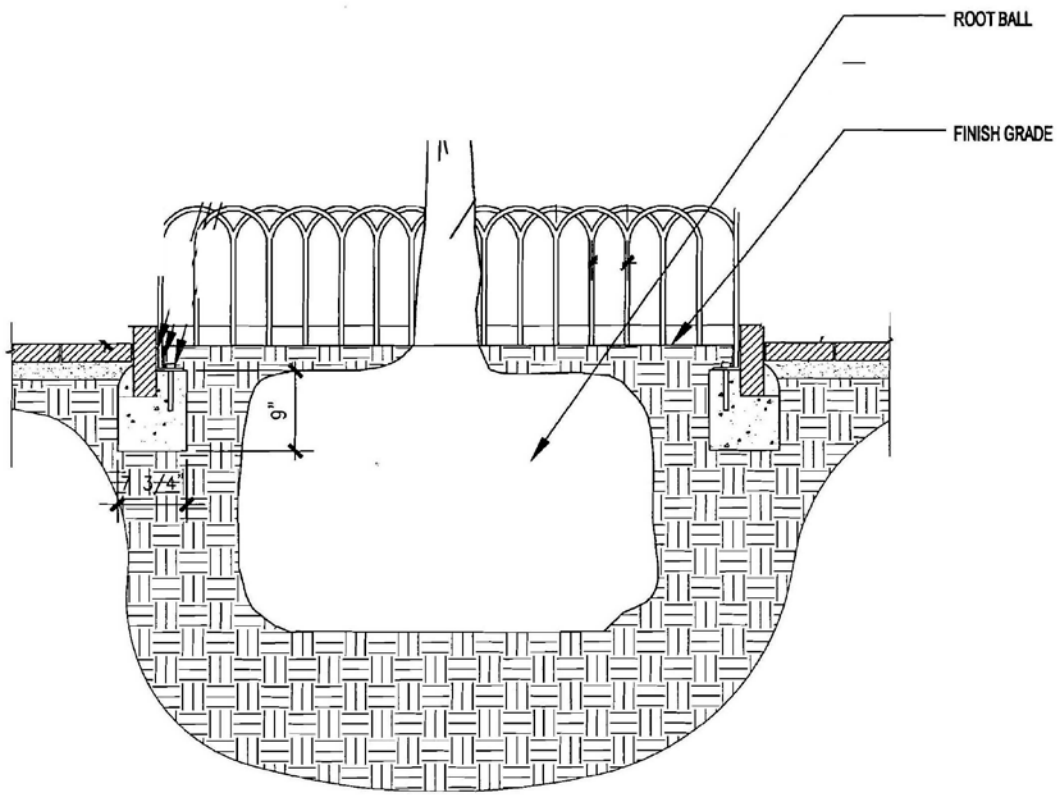

Submittal Requirement

All landscape and streetscape submittals shall provide a legend including information such as species, size, quantity, point value of plantings, and over all point totals.

City of College Station

SAMPLE LEGEND

LANDSCAPING POINT CALCULATIONS

SYMBOL	SIZE	NAME & TYPE	QUANTITY	POINT VALUE	POINT
	8" AND LARGER EXISTING W/BARRICADE	LIVE OAK TREE (Quercus Virginiana) Canopy tree	2	300	600
	4" TO 8" AND LARGER EXISTING W/BARRICADE	LIVE OAK TREE (Quercus Virginiana) Canopy tree	13	200	2,600
	2" TO 14.5" CALIPER EXISTING W/0 BARRICADE	LIVE OAK TREE (Quercus Virginiana) Canopy tree	8	35	280
	1.25 " CALIPER AND LARGER	TREE CREPE MYRTLE (Lagerstroemia indica) Non-canopy tree	6 (NEW)	40	240
	5 GAL	WAX LEAF LIGUSTRUM (Ligustrum texanum) Shrub	46 (NEW)	10	460

NOTE: Symbols are for reference. Any symbols used must be distinguishable at any scale.

BARRICADE FOR INDICATED TREES TO BE CONSTRUCTED WITH 48" HIGH ORANGE PLASTIC CONSTRUCTION NETTING AND SECURED TO STEEL T-POSTS. BARRICADE TO BE PLACED IN A CIRCLE AROUND INDICATED TREES A RADIAL DISTANCE OF 1' FOR EVERY 1" CALIPER OF TREE. BARRICADE MUST BE IN PLACE PRIOR TO ANY DEVELOPMENT ACTIVITY AS WELL AS THROUGHOUT THE CONSTRUCTION PROCESS.

STREETSCAPE:
136.57-LINEAR FEET x 6 = 819.42 = 820 POINTS
136.57-LINEAR FEET / 25 = 5.46 = 6 CANOPY TREES

POINTS PER PROJECT AREA:
26,416.3 SQUARE FEET OF SITE AREA
26,416.3 / 1,000 = 26.42
26.42 x 30 = 792.6 = 793 POINTS

TOTAL POINTS REQUIRED: 1,613

Tree Preservation

To receive barricaded points for existing trees, they must be barricaded one foot per caliper inch. A barricade detail must be provided on the landscape plan. Barricades must be in place prior to any activity on the property including, but not limited to, grading. If in any event the required barricades are not in place prior to any activity and maintained during construction, barricaded points will be forfeited.

Barricade Detail shown below.

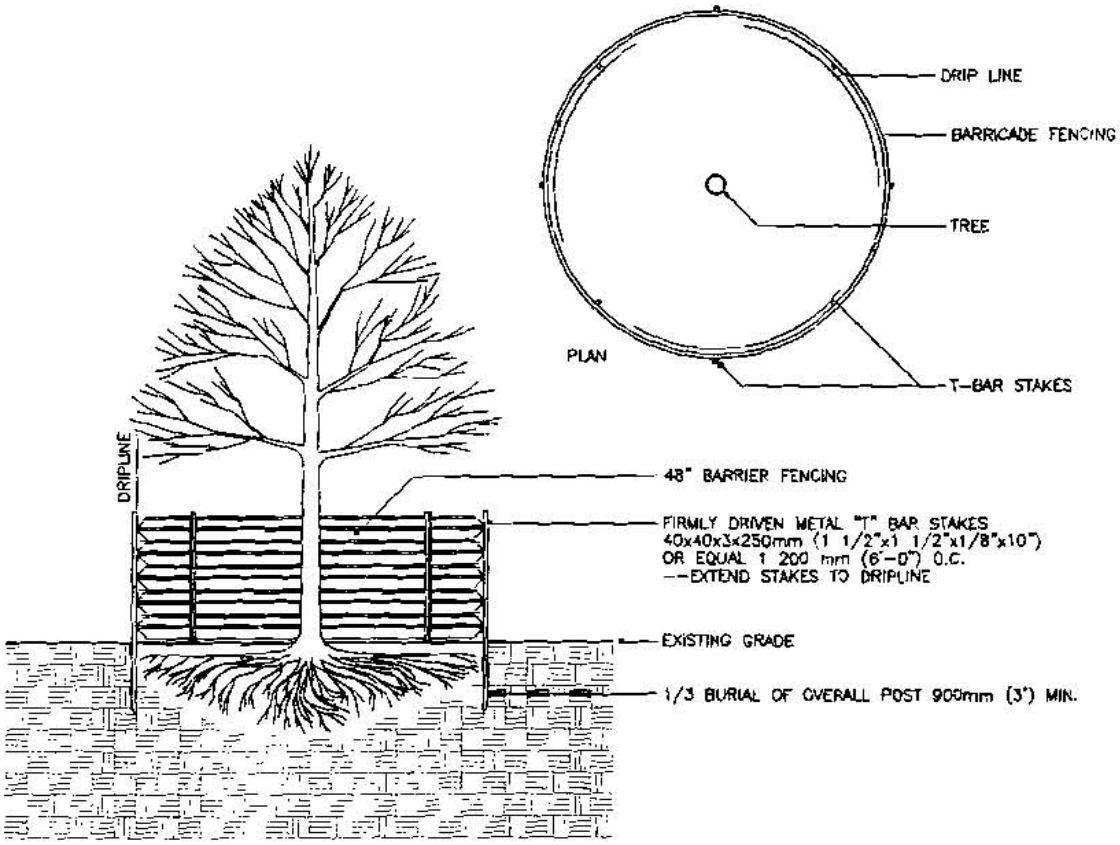

Planting List

This list recommends several species that do well in the College Station area. Not every species will perform well in all locations, and some species have detriments that need to be considered. Careful evaluation of the site, soils, available growing area, and climate needs to be exercised when selecting species. The legend below indicates how certain plantings may be utilized within a landscape plan according to Section 7.6 of the Unified Development Ordinance. In addition, this legend also shares information regarding other specific attributes.

Legend

***Recommended by Texas Forest Service for Brazos County**

1=Streetscape Planting
2=Screening
3=Salt Tolerant
4=Evergreen
5=Low Water Usage/Drought Tolerant
6=High Water Usage
7=Native to Texas
8=Living Screen
9=Qualifying "Texas Native" (eligible for additional landscape points)

Canopy Trees (40'+ canopy)

Common Name	Scientific Name	Qualifications
*American Elm	(Ulmus Americana)	1, 3, 5, 7, 9
*Bald Cypress	(Taxodium Distichum)	1, 3, 5, 7, 9
*Bur Oak	(Quercus Macrocarpa)	1, 3, 5, 7, 9
*Cedar Elm	(Ulmus Crassifolia)	1, 3, 5, 7, 9
*Live Oak	(Quercus Virginia)	1, 3, 4, 5, 7
*Pecan	(Carya Illinoinensis)	1, 3, 5, 7, 9
*River Birch	(Betula Niagra)	1, 3, 7
*Shumard Red Oak	(Quercus Shumardii) or (Q. Texana)	1, 3, 5, 7, 9
*Water Oak	(Quercus Nigra)	1, 3, 7
*Western Soapberry	(Sapindus Drummondi)	1, 5, 7
*Willow Oak	(Quercus Phellow)	1, 3, 5, 7, 9
American Sycamore	(Platanus Occidentalis)	3, 5, 7
Chinese Pistache	(Pistacia Chinensis)	1, 5
Chinkapin Oak	(Quercus Muehlenbergii)	1, 5, 7
Drake Elm	(Ulmus Parvifolia 'Drake')	1, 4
Lacey Oak	(Quercus Glaucoides)	5, 7

Leyland Cypress	(Cupressocyparis Leylandii)	3, 4(semi)

Canopy Trees continued…

Post Oak - Existing Only	(Quercus Stellata)	7
Texas Ash	(Frazinus Texensis)	1, 3, 5, 7, 9
Texas Pistache	(Pistachia Texana)	1, 4, 5, 7
Winged Elm	(Ulmus Alata)	1

Non-Canopy Trees

Common Name	Scientific Name	Qualifications
*American Holly	(Ilex Opaca) partial to shade	1, 3, 4, 5, 7, 8
*Carolina Cherry Laurel	(Prunus Caroliniana)	1, 3, 4, 5, 7, 8
*Chaste Tree	(Vitex Negundo)	1, 3, 5
*Crepe Myrtle	(Lagerstroemia Indica)	1, 3, 5
*Eastern Red Cedar	(Juniperus Virginiana)	1, 3, 4, 5, 7, 8
*Eve's Necklace tree	(Sophora Affinis)	1, 5, 7
*Goldenrain Tree	(Koelreuteria Paniculata)	1, 3, 5
*Japenese Black Pine	(Pinus Thunbergiana)	1, 3, 4, 5
*Lacebark Elm	(Ulmus Parvifolia)(Similar to Siberian Elm)	1, 3, 5
*Mexican White Oak	(Quercus Polymorpha)	1, 4(semi), 5, 7
*Mexican Plum	(Prunus Mexicana)	1, 4(semi), 5, 7
*Possumhaw Holly	(Ilex Decidua)	1, 5, 7
*Prairie Flameleaf Sumac	(Rhus Lanceolata)	1, 5, 7
*Texas Red Bud	(Cercis Canadensis)	1, 5, 7
*Tree Yaupon	(Ilex Vomitoria)	1, 3, 4, 5, 7
Bradford Pear	(Pyrus species)	1, 5
Chinese Fringe Tree	(Chionanthus Retusus)	5
Coppertone Loquat	(Eriobotrya Japonica)*	4
Italian Cypress	(Cupressus Sempervirens) *	3, 5
Rusty Blackhaw Viburnum	(Viburnum Rufidulum)	1
Shining Sumac	(Rhus Copalina)	1, 5, 7
Texas Kidneywood	(Eysenhardtia Texana)	5, 7
Texas Mountain Laurel	(Sophora Secundiflora)	1, 3, 4, 5
Texas Persimmon	(Diospyros Texana)	1, 5, 7
Wax Myrtle Tree	(Myrica Cerifera)	1, 4, 5, 7

Shrubs *(Please be aware that dwarf species are not permitted in required screening areas or in required buffer areas.)* **(grasses must be a perennial)**

Common Name	Scientific Name	Qualifications
Adam's Needle Yucca	(Yucca Filamentosa)	3, 4, 5
Abelia	(Abelia Grandiflora)	2, 5
Althea	(Hibiscus Syriacus)	2,3, 5
Agrito	(Berberis Trifoliolata)	2, 4
American Beautyberry	(Callicarpa Amercicana)	3, 5
Aromatic Sumac	(Rhus Aromatic)	3, 5
Belinda's Dream Rose	(Rose 'Belinda's Dream')	2, 5, 7
Boxwood	(Buxus) multiple varieties	2, 4, 5, 8
Carolina Buckthorn	(Rhamnus Caroliniana)	5
Carolina Laurel Cherry	(Prunus Caroliniana 'Bright 'n Tight'	2, 3, 4, 5, 7, 8
	(pruned properly for screening not height)	
Cast Iron Plant	(Aspidistra Elatior) – Needs Shade	5
Clyera	(Ternstromia Gymnanthera)	2, 4, 5
Elaeagnus	(Elaeagnus Macrophylla)	2, 3, 5
Acanthus	(Anisacanthus Quadrifidus Var 'Wrightii')	5
Fountain Grass	(Pennisetum Setaceum)	5
Gold Dust Aucuba	(Aucuba Japonica)*	2, 4, 6
Golden Euonymus	(Euonymus Japonica 'Aureo-Marginata')	2, 3, 4, 5
Gold Star Esperanza	(Tecoma Stans 'Gold Star')	3, 5, 7
Grandma's Yellow Rose	(Rose 'Nacogdoches')	5, 7
Gulf Muhly Grass	(Muhlenbergia Capillaries)	5
Hicks Yew	(Taxus x Medua 'Hicksii')	2, 4, 5(semi)
Holly, upright	Zone appropriate species	2, 3, 4, 5, 8
Indian Hawthorn	(Rhaphiolepis Indica)	2, 3, 4, 5
Juniper Species, Upright	(Juniperus species)	2, 3, 4, 5, 8
(there are many more varieties of Junipers but be careful to avoid the ones with bagworm susceptibility)		
Knock-Out Rose	(Rose 'Radrazz')*	2, 5
Maiden Grass	(Miscanthus Sinensis)	2, 3, 5
Mexican Bush Sage	Salvia Leucantha)	2, 5
Nandina	(Nandina Domestica 'Compacta'	2, 3, 4, 5
	or others if Zone appropriate)	

Shrubs continued...

Oleander	(Nerium Oleander sp.	2, 3, 4, 5
	(red or white are the hardiest)	
Pampas Grass	(Cortaderia Selloana sp.)	3, 4(semi)
Photinia Species	(Photinia x Fraseri)	2, 4
Pineapple Guava	(Feijoa Sellowiana)	2, 3, 4, 6
Pittosporum Species	(Pittosporum Tovira)	2, 3
Primrose Jasmine	(Jasminum Mesnyi (J. Primulinum)	2, 4, 6
Pyracantha	(Pyracantha Species)	2, 4
Rosemary, Upright	(Rosmarinus Officinalis)	2, 4, 5
Russian Sage	(Peroxskia Longifolia)	3, 5
Sago Palm	(Cycas Revolute)	3, 4
Soft Leaf Yucca	(Yucca Recurvifolia)*	3, 5
Spirea	(Spirea species)	2, 5
Texas Firecracker Bush	(Hamelia Patens)	3, 5
Texas Sage	(Leucophyllum Frutescens)	2, 3, 4, 7, 8
	('Greencloud' or Sp.)	
Viburnum species	(Leatherleaf, Walter's(3)	2, 3, 4
	Viburnum Macrophyllum or Sp.)	
Waxleaf Ligustrum	(Ligustrum Japonicum)	2, 3, 5
Wax Myrtle	(Myrica Pusilla)	2, 3, 4, 5
Whitebrush	(Aloysia Gratissima)	2, 5, 7
Yaupon	(Ilex Vomitoria 'Nana')	2, 3, 5, 8

Groundcovers and Vines (grasses must be a perennial)

Common Name	**Scientific Name**	**Qualifications**
Asparagus Fern	(Asparagus Densiflorus)	3
Algerian Ivy	(Hedera Canariensis)	4, 6
Asian Jasmine	(Trachelospermum Asiaticum)	4(semi),5(semi)
Baby Sun Coreopsis	(Coreopsis G. 'Baby Sun')	5
Big Blue Lily Turf	(Liriope Muscari)	4, 5
Carolina Jessamine	(Gelsemium Sempervirens)	4, 6
Creeping Juniper	(Juniperus Horizontalis)	4, 5
Daylilly	(Hemerocallis)	3
Dwarf Pampas Grass	(Cortaderia Selloana 'Pumila')	3, 4(semi)
English Ivy	(Hedera Helix)	3

Groundcover and Vines Continued…

Star Jasmine	(Trachelospermum Jasminoides)	4
Gregg Salvia	(Salvia Greggii)	4, 5
Henry Duelberg Salvia	(Salvia Farinácea 'Henry Duelberg')	5, 7
Monkey Grass	(Ophiopogon Japonicum)	4, 6
Mexican Feather Grass	(Nassella Tenuissima)	5
Ribbon Grass	(Phalaris Arundinacea)	5
Sage	(Salvia Farinacea)	2, 3, 4
Small-Leaf Spiderwort	Tradescantia Fluminensis)	4, 5
Texas Lantana	(Lantana Horrida)	3, 7
Turk's Cap	(Malvaviscus Arboreus 'Drummondii')	4(semi), 7
Vinca	(Vinca Major and V. Minor)	4, 6

Turfgrasses

Common Name	Scientific Name	Qualifications
Buffalo Grass	(Anthoxanthum Odoratum)	5, 7
Common Bermuda	(Cynodon Dactylon)	3, 5 (semi)
Tifway 419 Bermuda	(Cynodon 'TIFF 419')	5 (semi)
St. Augustine	(Stenotaphrum Secondatum)	3, 6
Zoysia	(Zoysia Species)	3, 5

Northgate Specific Standards

The following specifications shall be used when developing a site in Northgate:

Bicycle Racks: Inverted "U" bicycle racks or equivalent, subject to approval by the Administrator. See layout below. Bicycle racks must have Black or Bronze (Brown) powder coating color.

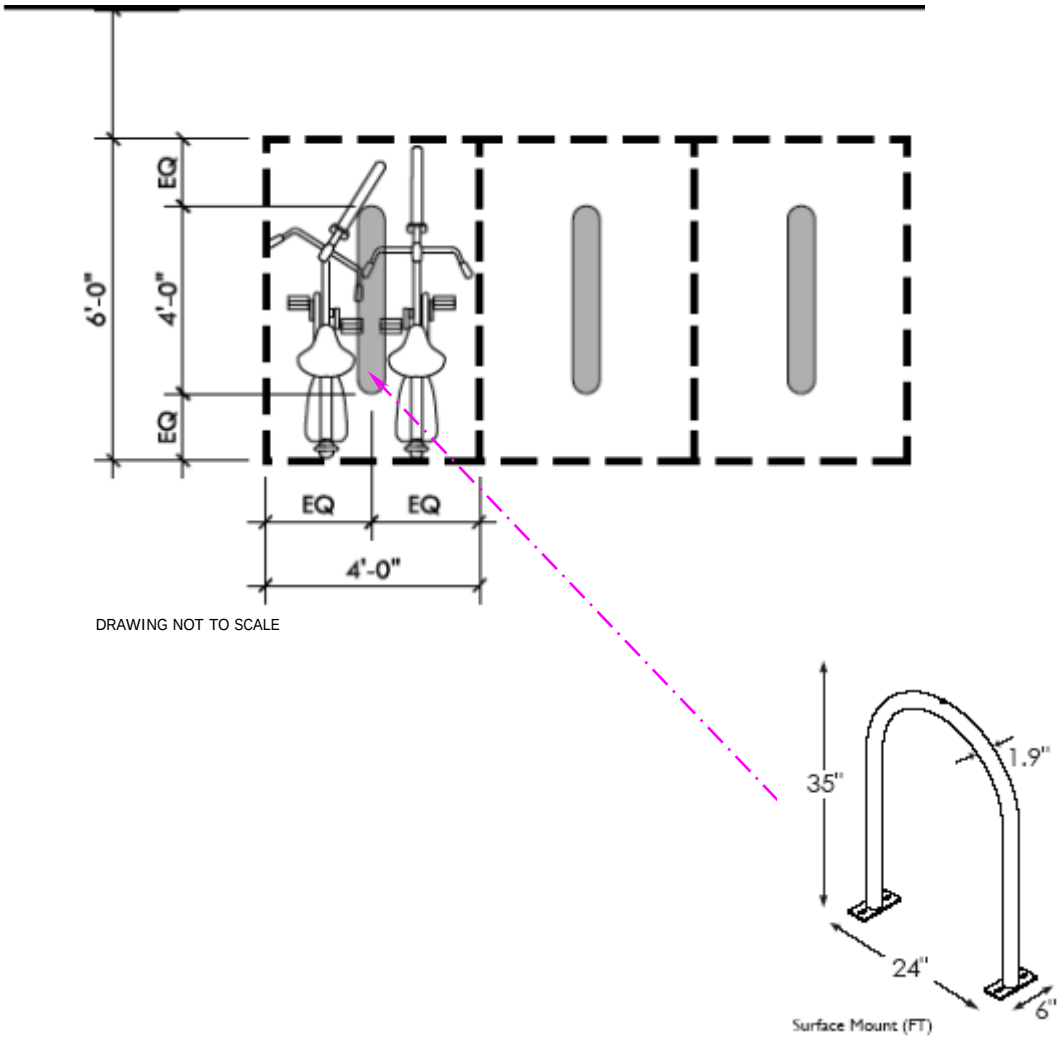

Acceptable Bicycle Racks

The rack should provide two points of contact with the frame—at least 6" apart horizontally. Or, if a rack cradles a bicycle's wheel, it must also support the frame securely at one point or more. The rack's high point should be at least 32".

INVERTED U
also called
staple, loop

POST & RING

Discouraged Bicycle Racks

WAVE
also called undulating
or serpentine

SPIRAL

BOLLARD

Prohibited Bicycle Racks

SCHOOLYARD
also called
comb, grid

Northgate Specific Standards

Brick Pavers and Approved Patterns: Holland Stone by Pavestone in River Red, or equivalent subject to approval by the Administrator. Brick pavers may be used on sidewalks and on streets at crosswalks or in intersections. Brick pavers in streets and sidewalks are to be placed on top of full depth concrete pavement, as specified in the B/CS Unified Design Guidelines Manual.

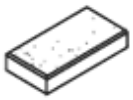

7-13/16" x 3-7/8” x 2-3/8” (Minimum Height/Thicknesses: 2-3/8”)
(Fractional dimensions are nominal)

Approved brick patterns are as follows. All sidewalks on the same block shall use the same brick pattern.

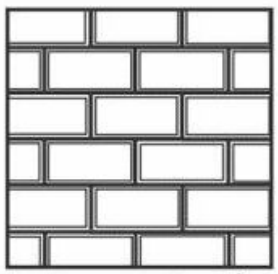

Runner Bond

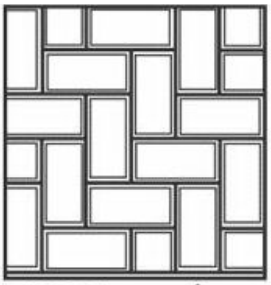

90° Herringbone

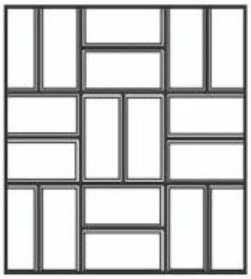

Parquet

Required Street Tree Options

- Live Oak (Quercus Virginiana)
- Cedar Elm (Ulmus Crassifolia)
- Drake Elm (Ulmus Parvifolia ’Drake’)
- Eastern Red Cedar (Juniperus Virginiana)
- Shumard Oak (Quercus Shumardii)
- Bald Cypress (Taxodium Distichum)

Street Tree Soil: CU-Structural Soil™ by Amereq, Inc., or equivalent subject to approval by the Administrator. Structural soil is an urban tree mix that can safely support pavements and sidewalks and is designed to provide ample rooting area for street trees, decreasing tree mortality and sidewalk failure.

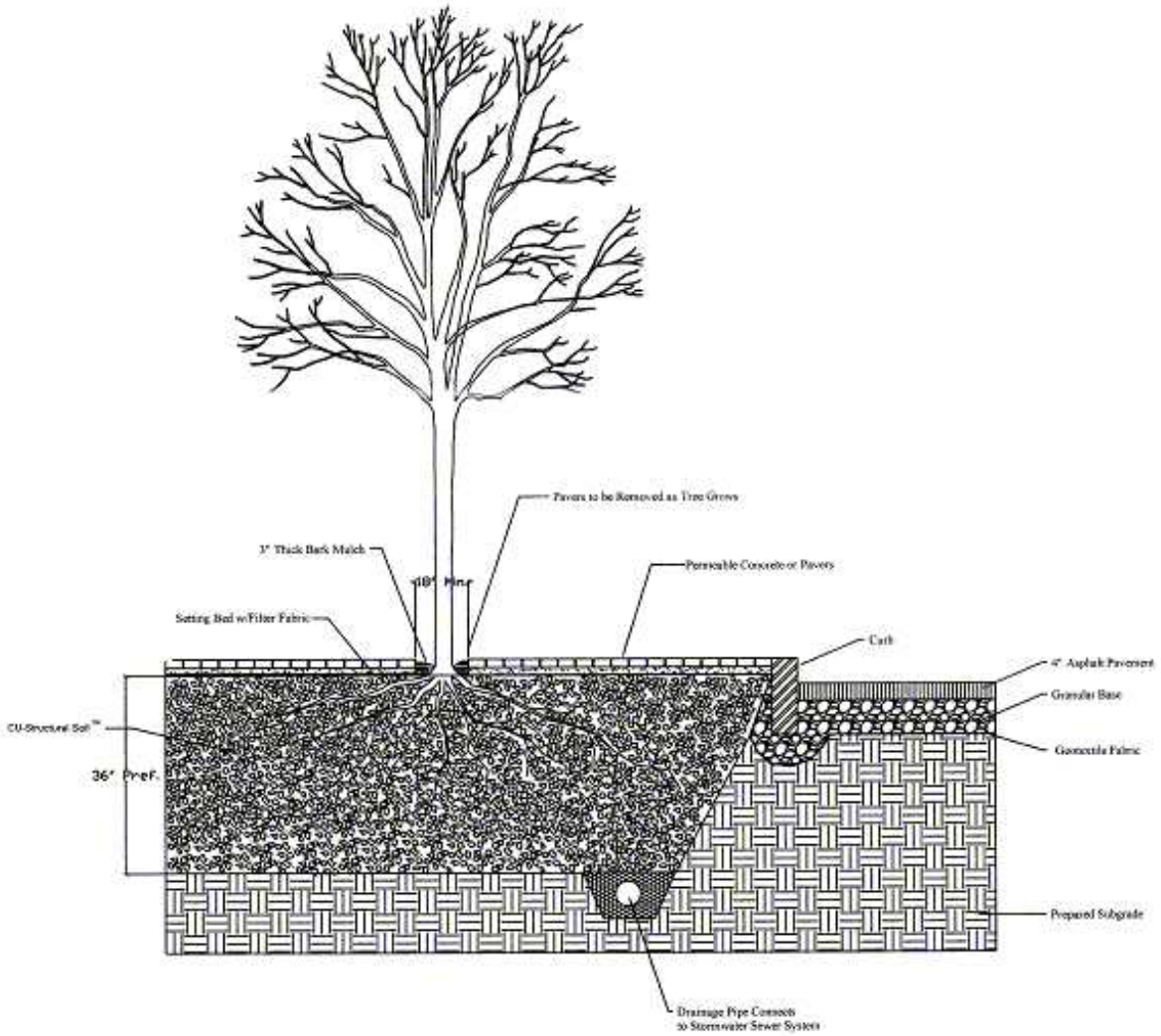

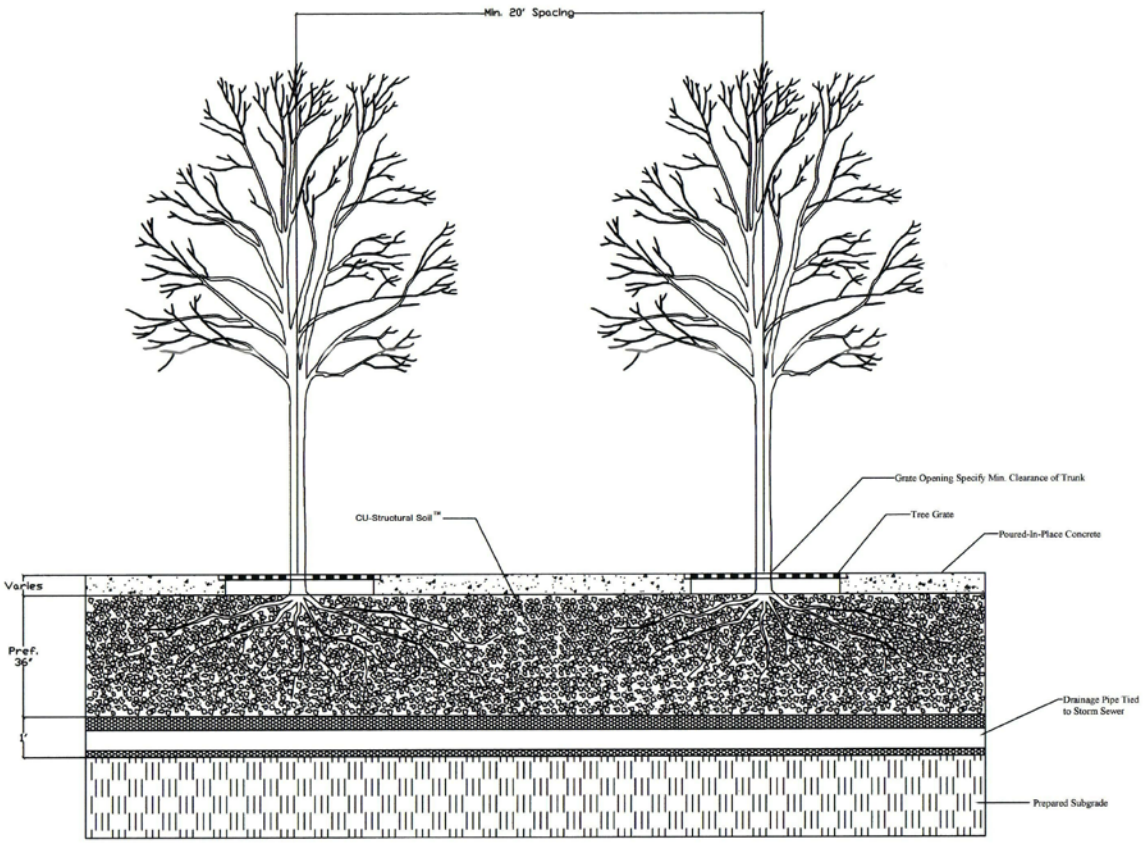

As an alternative to structural soil, an engineered design can be submitted. The design shall bridge the bedding material by tying the sidewalk into the curb and back to undisturbed soil and provide enough structural support to handle vehicles parking and driving on the sidewalk. Street tree/sidewalk components of a project shall be site specific and include structural design and utility conflicts. Design shall also provide for irrigation and drainage of the street trees. The following details are an example of a design that was utilized on a street project. They are provided only as an example.

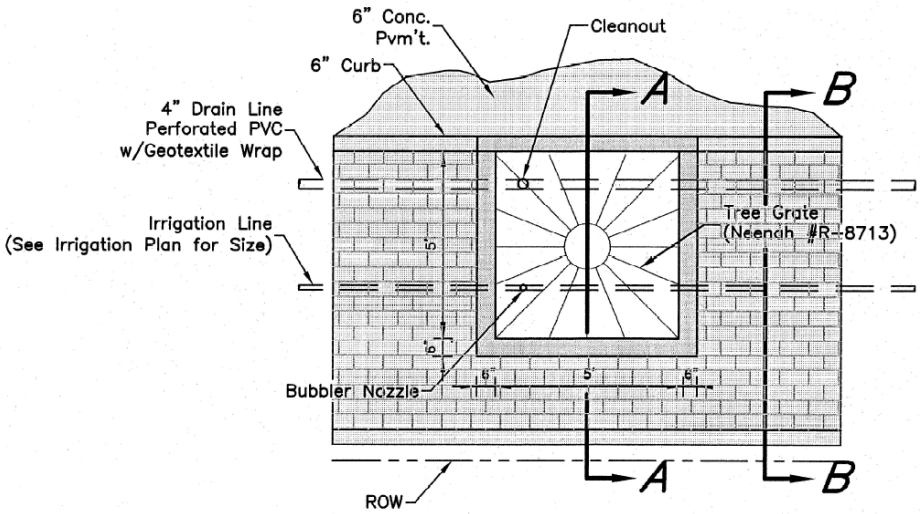

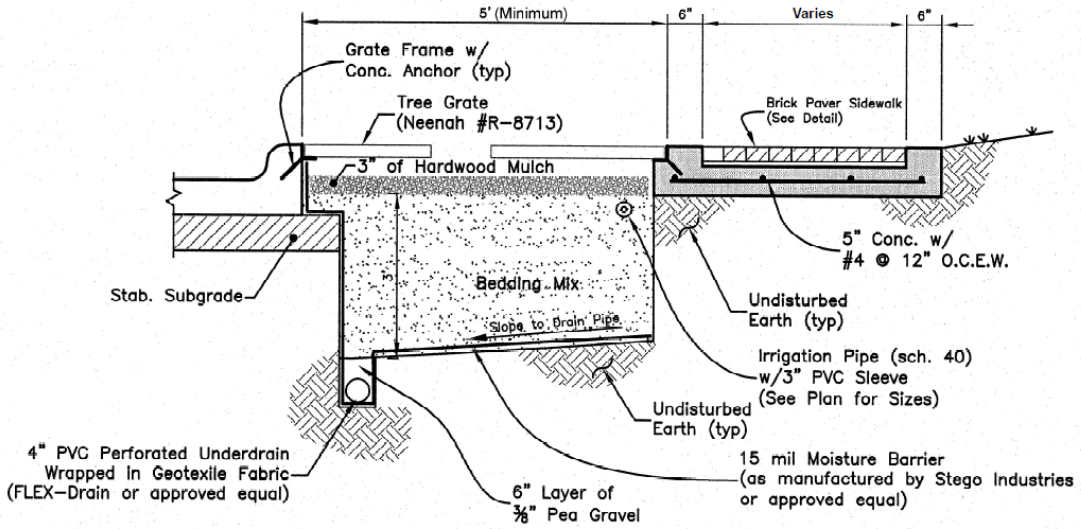

SECTION A–A

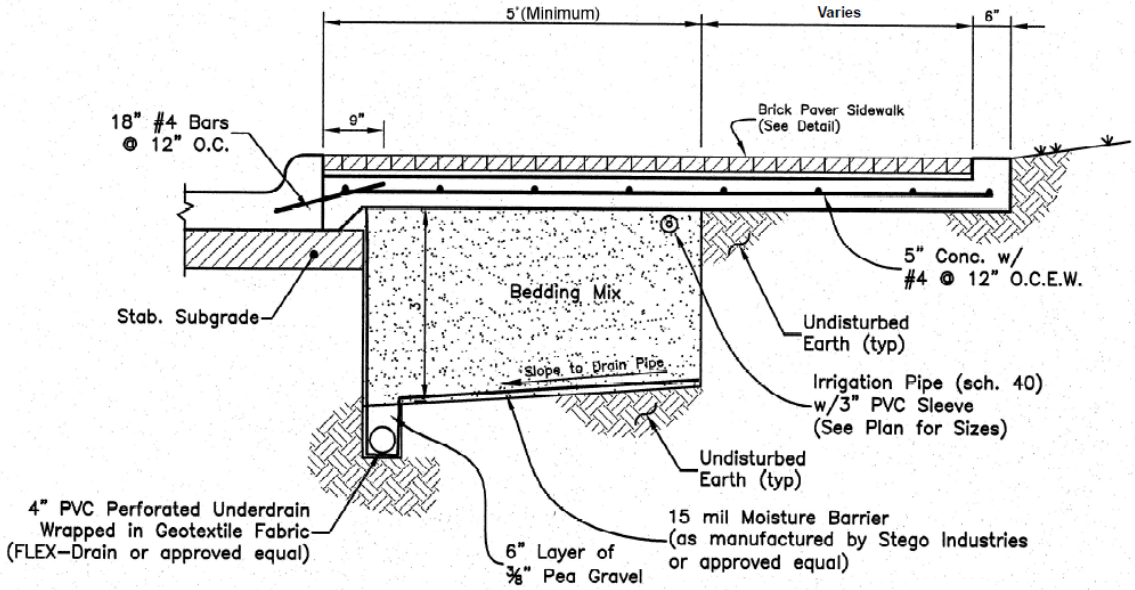

SECTION B–B

****Note: These details are provided as an example of structurally bridging the bedding. Actual design shall be engineered specific to the site and include structural design and utility conflicts**

Tree Planters: Elevating planting spaces above sidewalks or parking lots is a good way to provide more soil volume, provide positive drainage and discourage compaction due to pedestrian traffic. With heights up to 36 inches, the planter lip can also provide seating.

Raised planters should be a minimum of six feet by six feet (6' x 6') and 18 inches high. The maximum height is three feet (3'). Tree planter will be constructed of brick and will match the required sidewalk pavers, alternatives subject to approval by the Administrator.

The bottom of the bed should be kept open and planting soil should be cultivated into the original soil to encourage roots to escape from the bed into surrounding soil.

Tree Grates: Parkway Collection Model R-8738-A1 by Neenah Foundry Company, or equivalent subject to approval by the Administrator. See picture below.

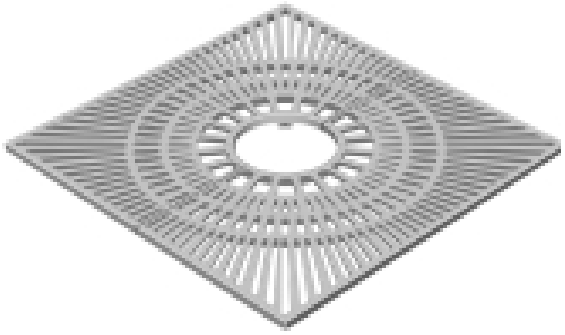

60" square with 16" diameter expandable tree opening. Bolted light opening grates (8-1/4"x17-1/8"x5-3/8") for use with or without sub-grate lighting.

Tree grates and frames shall be of cast iron. Gray Iron castings shall conform to A.S.T.M. A-48, Class 35 or better.

Tree Wells:

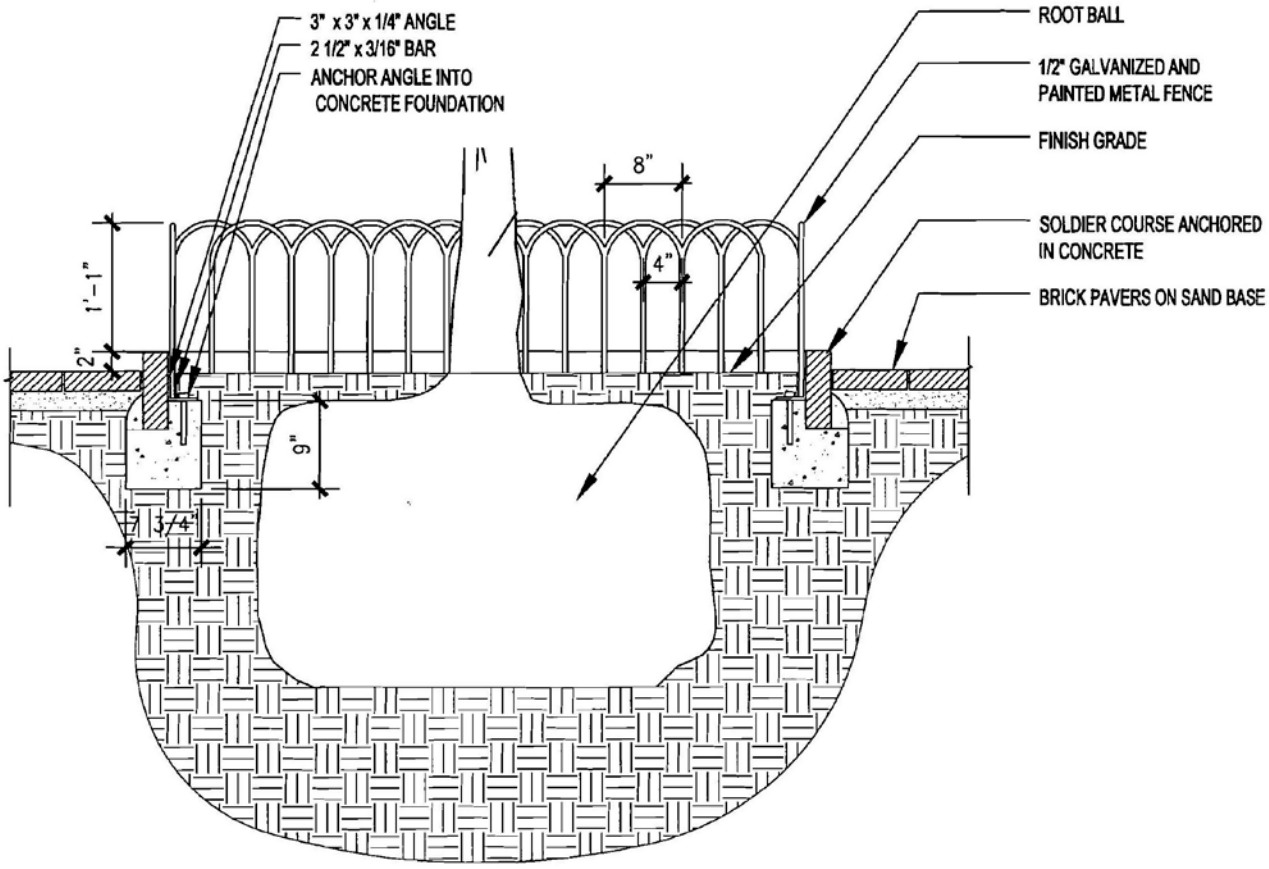

Sidewalk Benches: Steelsites RB Series Model RB-28 or RB-12 by Victor Stanley Inc., or equivalent; subject to approval by the Administrator.

Model RB-28

1/4 x 1-1/2 (6.4 x 38.1mm) steel seat members.

Finished end sections are 1/2 x 2 (12.7 x 50.8 mm) solid steel bar, welded and ground.

Electrostatically powder-coated with polyester powder coatings.

Black or Bronze (Brown) powder coating color

Model RB-12

Benches are to be six feet (6') minimum in length.

Four-foot (4') benches are permitted when placed perpendicular to the street and four feet (4') minimum clear space is maintained for an accessible route.

When a four-foot (4') is used, it is recommended to orient a pair of benches towards each other to create conversation spaces.

Trash Receptacles: Ironsites Series Model S-42 by Victor Stanley Inc., or equivalent; subject to the approval of the Administrator.

Model S-42

36-gallon
Solid 3/8''-thick vertical steel bars
High strength plastic liner
Black or Bronze (Brown) powder coating color

Physical Barricade: Northgate Outdoor Dining on College Main are required to provide a Commercial Aluminum Fence Panel Style 9, by GreatFence.com, or equivalent.

Hand Railing Specifications	Great Fence.com or equivalent
Picket: Size Spacing Height	3.4" sq. x .055" 3 5/8" 36"
Rails: Top Walls Side Walls	1 3/8" x .065" 1 1/4" x .088"
Post : Size Height	2.5" sq. x 2.5" 39"
Fasteners	Stainless Steel
Material	Premium Aluminum
Finish	High- Quality Exterior Paint for Metal or superior finish
Color	Flat Black
Strength	ICC Code Compliant

Gating of Multi-Family Developments

Gated multi-family developments must demonstrate that the following standards will be met on the site plan:

- Access shall be provided at all times for police, fire, city inspection, mail delivery, garbage pickup, dial-a-rides, utility, school buses, and other health and safety-related vehicles. Access must not require drivers to exit their vehicles.
- The gate shall not be placed in a public right-of-way or easement.
- Adequate access for pedestrians and bicycles must be provided along the perimeter of the gate.
- Adequate turn around areas for vehicles that are denied access shall be provided in order to prevent backing into a public street.
- Gated entryway throat length designs taking access from residential, major collector, or minor collector roadways, shall meet the following requirements:
  - o A minimum of 60 feet (60') for up to 25 multi-family units, or
  - o A minimum of 100 feet (100') for 26 multi-family units or greater.
- Gated entry way throat length designs taking access from major and minor arterials shall be reviewed and approved on a case by case basis by the City of College Station's Transportation Planner.
- The gated entry pavement widths, for both ingress and egress, shall be a minimum of 20 feet (20') per driveway and are required to provide a minimum 4 feet (4') center median.
- The gated area shall provide a minimum unobstructed vertical clearance of 14 feet six inches (14' 6") from finished roadway surface over the entire width of the entry roadway.
- All key pads shall be placed four feet (4') to six feet (6') above finished grade of the roadway.

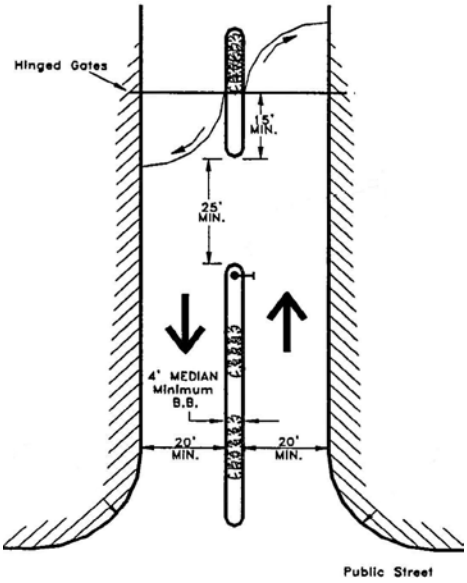

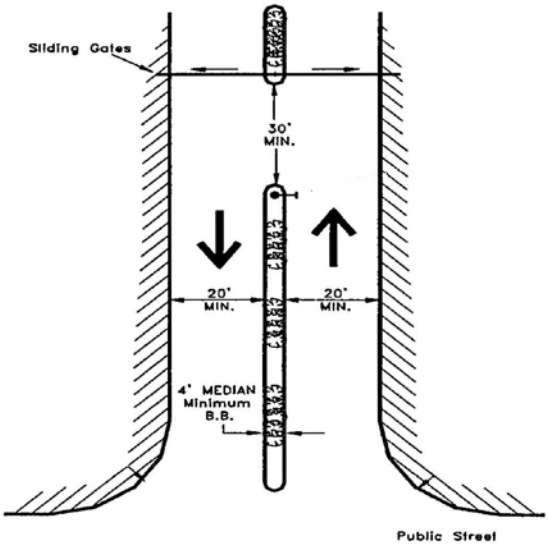

General Site Plan Notes

The following General Notes should be included on the Site Plan:

- "100% coverage of groundcover, decorative paving, decorative rock, or a perennial grass is required in parking lot islands, swales and drainage areas, the parking lot setback, rights-of-way, and adjacent property disturbed during construction."

- "Irrigation system will be protected by either a Pressure Vacuum Breaker, a Reduced Pressure Principle Back Flow Device, or a Double-Check Back Flow Device, and installed as per City Ordinance 2394."

- "All back flow devices will be installed and tested upon installation as per City Ordinance 2394."

- "Exterior building and site lighting will meet the standards of Section 7.11 of the Unified Development Ordinance. The light source shall not project below an opaque housing and no fixture shall directly project light horizontally. Fixtures will be mounted in such a manner that the projected cone of light does not cross any property line."

- "All signs are to be permitted separately."

- All landscaping installed around transformer box shall maintain 3' clearance from sides and rear and 10' clearance from transformer doors.

- **If applicable** - "Property owners with dumpster enclosures located within a Public Utility Easement (PUE) will be responsible for replacement of the screening enclosure if it becomes necessary to remove them for utility construction and/or maintenance."

- **For Suburban Commercial & Wellborn Commercial Properties Only -** "All roof and ground-mounted mechanical equipment shall be screened from view or isolated so as not to be visible from any public right-of-way or residential district within 150' of the subject lot, measured from a point five feet above grade. Such screening shall be coordinated with the building architecture and scale to maintain a unified appearance."

SITE PLAN MINIMUM REQUIREMENTS
(ALL CITY ORDINANCES MUST BE MET)
INCLUDING BUT NOT LIMITED TO THE FOLLOWING:

- ❑ Sheet size - 24” x 36” (minimum).
- ❑ 3"x10" blank area in the bottom right corner on each page of your drawings for the City of College Station approval stamps.
- ❑ A key map (not necessarily to scale).
- ❑ Title block to include:
  - ❑ Name, address, location, and legal description
  - ❑ Name, address, and telephone number of applicant
  - ❑ Name, address, and telephone number of developer/owner (if differs from applicant)
  - ❑ Name, address, and telephone number of architect/engineer (if differs from applicant)
  - ❑ Date of submittal
  - ❑ Total site area
- ❑ North arrow.
- ❑ Scale should be largest standard engineering scale possible on sheet.
- ❑ Ownership and current zoning of parcel and all abutting parcels.
- ❑ The total number of multi-family buildings and units to be constructed on the proposed project site.
- ❑ The density of dwelling units per acre of the proposed project.
- ❑ The gross square footage of all buildings and structures and the proposed use of each. If different uses are to be located in a single building, show the location and size of the uses within the building. Building separation is a minimum of 15 feet w/o additional fire protection.

Locations of the following on or adjacent to the subject site:
Designate between existing and proposed

- ❑ Phasing. Each phase must be able to stand alone to meet ordinance requirements.
- ❑ Buildings (Existing and Proposed).
- ❑ Setbacks according to UDO, Article 5.

Geography
- ❑ Water courses.
- ❑ 100 yr. floodplain and floodway (if applicable) on or adjacent to the proposed project site, please note if there is none on the site with confirming FEMA/FIRM map number.
- ❑ Existing topography (2’ max or spot elevations) and other pertinent drainage information. (If plan has too much information, show drainage on separate sheet.)
- ❑ Proposed grading (1’ max for proposed or spot elevations) and other pertinent drainage information. (If plan has too much information, show drainage on separate sheet.)

Streets, Parking, and Sidewalks
- ❑ Existing streets and sidewalks (R.O.W.).
- ❑ Existing Driveways, both opposite and adjacent to the site according to UDO, Article 7
- ❑ Proposed drives. Minimum drive aisle width according to UDO, Article 7

- ❑ Indicate proposed driveway throat length according to UDO, Article 7
- ❑ Proposed curb cuts.
  For each proposed curb cut (including driveways, streets, alleys, etc.) locate existing curb cuts on the same and opposite side of the street to determine separation distances between existing and proposed curb cuts.
- ❑ Proposed curb and pavement detail.
  A 6" raised curb is required around all edges of all parts of all paved areas without exception. (To include island, planting areas, access ways, dumpster locations, utility pads, etc.) No exception will be made for areas designated as "reserved for future parking".
- ❑ Proposed medians.
- ❑ Proposed sidewalks (both public and private).
- ❑ Proposed pedestrian/bike circulation and facilities for non-residential buildings (UDO, Article 7)
- ❑ Off-Street parking areas with parking spaces drawn, tabulated, and dimensioned. Designate number of parking spaces required by ordinance and provided by proposal.
- ❑ Handicap parking spaces.
- ❑ Parking Islands drawn and dimensioned with square footage calculated according to UDO, Section 7.2 or 7.9 for nonconforming residential buildings.
- ❑ Parking setback from R.O.W. to curb of parking lot as required.
- ❑ Wheelstops may be required when cars overhang onto property not owned by the applicant or where there may be conflict with pedestrian or bike facilities, handicap accessible routes or above ground utilities, signs or other conflicts.
- ❑ Security gates, showing swing path and design specs with colors.
- ❑ Guardrails. Include design and colors.
- ❑ Traffic Impact Analysis for non-residential development (UDO, Article 7)
  Please note if none is required.
- ❑ Will there be access from a TxDOT R.O.W.? Yes ❑ No ❑
  If yes, then TxDOT permit must be submitted with this application.

Easements and Utilities

- ❑ Easements - clearly designate as existing or proposed and type (utility, access, etc.)
- ❑ Utilities (noting size and designate as existing or proposed) within or adjacent to the proposed site, including building transformer locations, above ground and underground service connections to buildings, and drainage inlets.
- ❑ Meter locations, existing and proposed (must be located in public R.O.W. or public utility easement).
- ❑ Provide a water and sanitary sewer legend to include
  - ❑ Minimum water demands
  - ❑ Maximum water demands
  - ❑ Average water demands in gallons per minute, and
  - ❑ Maximum sewer loadings in gallons per day
- ❑ Will there be any utilities in TxDOT R.O.W.? Yes ❑ No ❑
  If yes, then TxDOT permit must be submitted with this application.

Fire Protection

- ❑ Show fire lanes. Fire lanes with a minimum of 20 feet in width with a minimum height clearance of 14 feet must be established if any portion of the proposed structure is more than 150 feet from the curb line or pavement edge of a public street or highway.

- ❑ Show proposed and existing fire hydrants. Fire hydrants must be located on the same side of a major street as a project, and shall be in a location approved by the City Engineer. Any structure in any zoning district other than R-1, R-1A, or R-2 must be within 300 feet of a fire hydrant as measured along a public street, highway or designated fire lane.
  NOTE: Fire hydrants must be operable and accepted by the City, and drives must have an all weather surface before a building permit can be issued.
- ❑ Will building be sprinkled? Yes ❑ No ❑
  If the decision to sprinkle is made after the site plan has been approved, then the plan must be resubmitted.
  If Yes,
- ❑ Show fire department connections. FDC's should be within 150' of the fire hydrant. In no case shall they be any further than 300' apart, and they shall be accessible from the parking lot without being blocked by parked cars or a structure.

Landscaping

- ❑ Landscape plans as required in Article 7 of the Unified Development Ordinance. The landscaping plan can be shown on a separate sheet if too much information is on the original site plan. If requesting protected tree points, then those trees need to be shown appropriately barricaded on the landscape plan. Attempt to reduce or eliminate plantings in easements. Include information on the plans such as:
  - ❑ Required point calculations
  - ❑ Additional Streetscape points required. Streetscape compliance is required on all streets.
  - ❑ Calculations for # of street trees required and proposed (proposed street tree points will accrue toward total landscaping points.)
  - ❑ Proposed new plantings with points earned
  - ❑ Proposed locations of new plantings
  - ❑ Screening of parking lots, 50% of all shrubs used for screening shall be evergreen.
  - ❑ Screening of dumpsters, concrete retaining walls, off street loading areas, utility connection points, or other areas potentially visually offensive.
  - ❑ existing landscaping to remain
  - ❑ Show existing trees to be barricaded and barricade plan. Protected points will only be awarded if barricades are up before the first development permit is issued.
  - ❑ Buffer as required in Article 7 of the Unified Development Ordinance.
  - ❑ Show irrigation system plan. (or provide note on how irrigation system requirement will be met prior to issuance of C.O.) All plans must include irrigation systems for landscaping. Irrigation meters are separate from the regular water systems for buildings and will be sized by city according to irrigation demand submitted by applicant and must include backflow prevention protection.
- ❑ Is there any landscaping in TxDOT R.O.W.? Yes ❑ No ❑
  If yes, then TxDOT permit must be submitted at the time of application.

Other

- ❑ Common open spaces sites
  - ❑ Loading docks
  - ❑ Detention ponds
  - ❑ Retaining walls

- ❑ Sites for solid waste containers with screening. Locations of dumpsters are accessible but not visible from streets or residential areas. Gates are discouraged and visual screening is required. (Minimum 12 x 12 pad required.)
- ❑ Are there impact fees associated with this development? Yes ❑ No ❑

NOTE: Signs are to be permitted separately.